The Heating Ventilation and Air Conditioning system is engineered to provide a comfortable environment within the passenger compartment by providing heated air to defrost the windows, warm the passengers' compartment and the passengers. Ventilation controls are used to direct the air in and around the passenger compartment and finally the air-conditioning sub-system to cool and dehumidify the air. Heating is provided by circulating heated engine coolant through a heat exchanger (Heater Core) in the HVAC housing where the heat is transferred to air passing through it from the blower fan. The Air Conditioning sub-system uses a refrigeration loop to chill a heat exchanger called the evaporator located inside the HVAC housing. Again air from the blower fan passes through the evaporator fins where the air is cooled and dehumidified. The refrigeration loop consists of the evaporator, connecting lines and hoses and the compressor which pumps the refrigerant through the loop. The condenser, also a heat exchanger, is located in front of the engine radiator and dissipates heat to the air passing through it and the engine radiator. The system also uses a refrigerant storage device, either an accumulator or receiver depending on system type, and a metering device which regulates the flow of refrigerant and temperature of the evaporator. Various sensors and switches are used to protect the compressor and control radiator fans. Finally the HVAC housing contains doors and flaps controlled manually or automatically to direct and distribute the heated and cooled air.

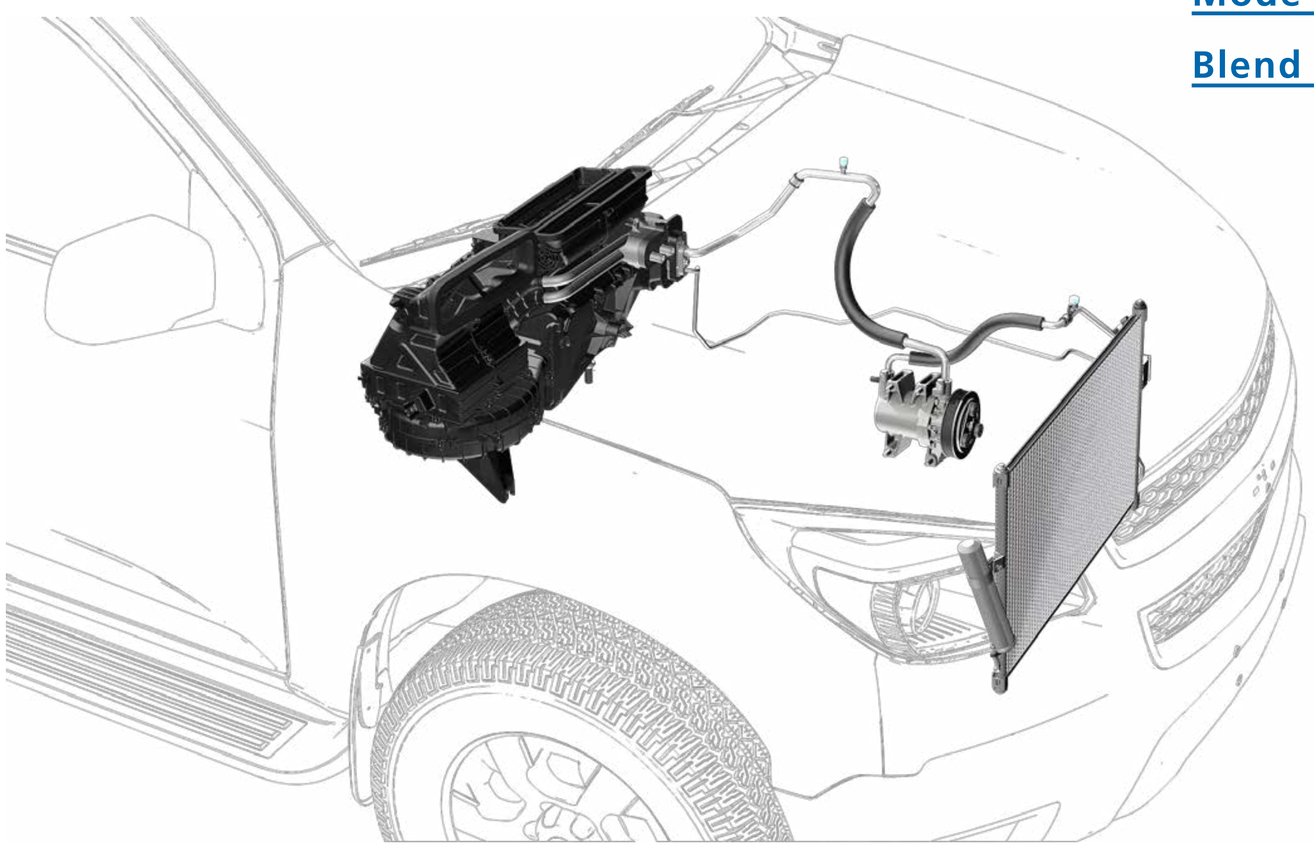

- Heater Core
- Blower Fan
- HVAC Housing
- Mode Door
- Blend Door
- Recirculation/Fresh Air Door
- Door Motor/Actuator
- HVAC Control Head / Module
- Blower Fan Resistor/Driver
- Evaporator
- Condenser
- Compressor
- Compressor Clutch
- Accumulator
- Receiver-Drier
- Orifice Tube
- Thermal Expansion Valve TXV
- Refrigerant Hose/Line
- Refrigerant Pressure Sensor/Switch
- Refrigerant
- Refrigerant Oil
- Refrigerant Filter

Heater Core

Description/Function: The heater core is a heat exchanger that heats the cabin air by way of engine coolant. The heater core is located in the HVAC housing behind the dash. Heater hoses connect it to the engine cooling system.

Faults/Symptoms: Symptoms include: coolant odor in cabin, windshield fogging during defrost. Carpet wet with coolant and low or no heat. Faults include: leaking tubes and headers, blocked tubes or headers

Tech Tip

Heater cores can be damaged from engine overheating.

Heater cores can become blocked by sediment and scale.

Blower Fan

Description/Function: An electric fan located in the HVAC housing that pushes air through the heater core and evaporator and into the cabin. The fan is controlled by the HVAC controller, either through a stepped resistor, providing 3 or 4 fan speeds, or through a pulse width modulated (PWM) driver which provides infinitely variable fan speeds.

Faults/Symptoms: Symptoms include: inoperative blower, one or more speeds inoperative or abnormal noise. Faults include: worn motor brushes, open or shorted motor windings, open fan resistor, malfunctioning fan driver, worn motor shaft bearings, damaged fan, or foreign object stuck in fan.

Tech Tip

Worn bearings, or dragging fan cause motor to draw higher current, this can cause fan driver to fail.

Fans that operate on one speed, likely have a failed fan resistor.

HVAC Housing

Description/Function: The Heating Ventilation and Air Conditioning housing contains the heater core, evaporator, blower fan, mode door, blend door, fresh air/recirculation door and blower fan resistor/driver. The housing is typically made from several plastic box sections screwed or clipped together.

Faults/Symptoms: Symptoms include: inability to change air distribution or temperature. Unpleasant odors. Faults include: distorted housing, binding or broken doors, deteriorated seals/ insulation, and odors caused by microbial growth.

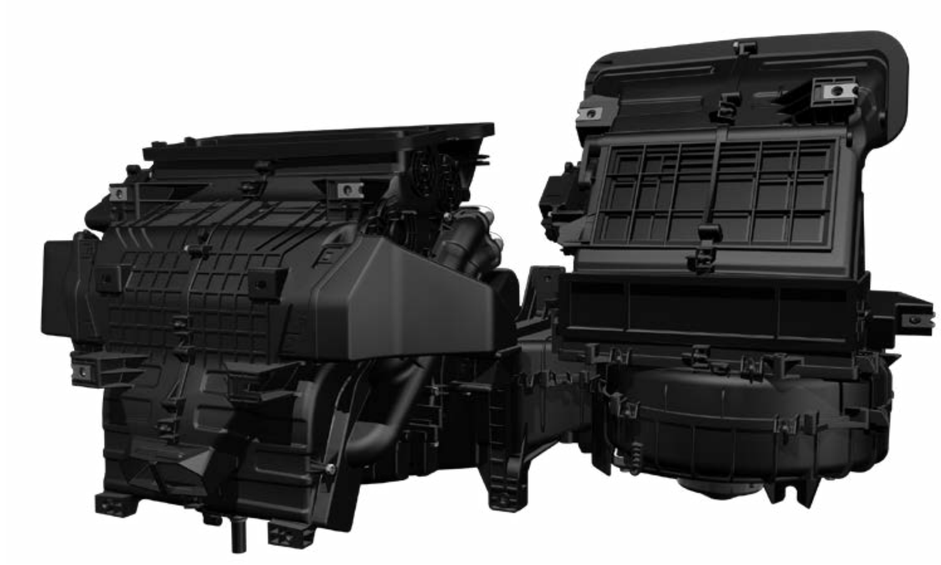

Tech Tip

Some HVAC housing failures can be repaired with door shaft kits, look for service bulletins that may address these issues.

Mode Door

Description/Function: The mode door controls the distribution of air within the HVAC housing. The common modes are Defrost, Floor, Vent, or a combination of two or more. Some vehicles have multiple doors that comprise the mode door function; others use a scrolling plastic film with openings that align with apertures at different positions. The mode door can be controlled manually or automatically via cable, vacuum actuator or electric actuator motor.

Faults/Symptoms: Symptoms include: incorrect air distribution, abnormal noise when changing modes. Faults include: damaged mode door, binding or stripped actuator or linkage.

Tech Tip

Some electric door actuators are shipped in a basic start position They must be installed on the HVAC housing before connecting the electrical connector or the actuator or mode door can be damaged.

Blend Door

Description/Function: The blend door controls the flow of air through or around the heater core to control the air temperature. The blend door can be controlled manually via cable or automatically with an electric actuator motor.

Faults/Symptoms: Symptoms include: incorrect temperature control, abnormal noise when adjusting temperature. Faults include: damaged blend door, binding or stripped actuator or linkage.

Tech Tip

On dual zone HVAC, if one zone does not provide heated air, check blend door for damaged linkage or actuator.

Recirculation/Fresh Air Door

Description/Function: The recirculation/fresh air door controls the source of the air entering the HVAC system. It can allow fresh air from outside the cabin or recirculate air from within the cabin. The door can be controlled manually or automatically via cable, vacuum actuator or electric actuator motor.

Faults/Symptoms: Symptoms include: fogging of windows, diminished MAX A/C performance, abnormal noise when changing air source. Faults include: damaged recirculation/fresh air door, binding or stripped actuator or linkage.

Tech Tip

The recirculation/fresh air door is normally open to fresh air during Defrost and closed during Max A/C.

Door Motor/Actuator

Description/Function: The various doors within the HVAC housing can be controlled by several methods, the first is cable actuation. The second method is vacuum actuation; here a vacuum motor moves the door to an open or closed position. Lastly the electric servo motor, which can position the door between open and closed. Automatic HVAC systems use the electric servo motor, because it can report the door position back to the HVAC controller.

Faults/Symptoms: Symptoms include: incorrect temperature or air distribution control, abnormal noise when adjusting. Faults include: binding or stripped actuator, vacuum leaks or electrical malfunction.

Tech Tip

Certain door actuators are shipped in a basic park position, do not electrically connect actuator before it is installed on the HVAC housing, doing so will allow actuator to move beyond its limits, damaging the actuator.

On vacuum controlled systems, when the vacuum source is lost, the default mode is Defrost.

HVAC Control Head / Module

Description/Function: The HVAC control that the driver or passenger operates is called the control head, this translates the commands into mechanical, vacuum or electrical signals to operate the blower fan, blend, mode and recirculation doors. Some systems with automatic functions have an integrated or remotely mounted computer module that monitors the control head inputs, cabin and duct temperatures to adjust the blower speed and door positions to maintain the desired cabin temperature.

Faults/Symptoms: Symptoms include: incorrect temperature or air distribution control, abnormal noises, no blower fan or A/C. Faults include: binding or stripped cable mechanism, vacuum leaks or electrical malfunctions.

Tech Tip

Newer automatic systems have on-board diagnostic capabilities that can direct you to the problem area.

Some HVAC concerns may be related to the HVAC module software, calibration updates may be available and are communicated through technical service bulletins.

Blower Fan Resistor/Driver

Description/Function: The blower fan motor speed control is accomplished using either a stepped resistor or a transistorized driver module. The resistor provides for 3 to 4 fixed speeds, selected by the fan control switch on the control head. The driver module allows for infinitely variable speed, by pulse width modulating the fan motor current. Both are located on the HVAC housing where they can be cooled by air flow from the fan.

Faults/Symptoms: Symptoms include: inoperative blower fan or operation on only one speed. Faults include: open resistor, failed driver module.

Tech Tip

The resistor and driver modules generate heat hence the need for cooling by the blower fan. Excessive fan motor current can damage the resistor or driver module.

Evaporator

Description/Function: The evaporator is a heat exchanger located in the HVAC housing that cools and dehumidifies the cabin air. Refrigerant is metered into the evaporator by the orifice tube or expansion valve, the pressure drop causes the refrigerant to evaporate inside the evaporator tubes, the refrigerant absorbs heat causing the evaporator fins to become cold. Air from the blower fan passes through the fins, where heat from the air is removed and moisture condenses on the fins. The cool and drier air is then distributed to the cabin.

Faults/Symptoms: Symptoms include: poor cooling performance, little to no airflow, objectionable odors. Faults include: leaks, oil bound refrigerant tubes, evaporator freezing, odors caused by microbial growth, evaporator corrosion.

Tech Tip

Excessive refrigerant oil can reduce evaporator cooling performance.

Environmental contaminants and the condensate provide ideal conditions for microbial growth. Evaporator cleaning products can inhibit this growth and reduce odors

Check evaporator drains for restrictions, clean to prevent water back-up onto carpets.

Condenser

Description/Function: The condenser is a heat exchanger typically located in front of the engine radiator. It dissipates heat absorbed by the refrigerant from the evaporator and from the compressor to the outside air. Hot refrigerant gas passes through tubes where heat is removed causing it to turn into a liquid. The air flowing through the fins carry the heat away.

Faults/Symptoms: Symptoms include: poor cooling performance. Faults include: leaks, restricted airflow and refrigerant restrictions.

Tech Tip

Modern parallel-flow condensers have very small refrigerant passages that are easily blocked by debris. When replacing a failed compressor, it is best to replace the condenser instead of trying to flush it.

Compressor

Description/Function: The compressor is the heart of the A/C sub-system. It pumps the refrigerant through the system. The compressor is typically engine driven via the accessory belt, a clutch on the compressor is used to engage and disengage the compressor. Hybrid vehicles are typically equipped with an electric motor driven compressor. The compressor draws in cool refrigerant gas from the evaporator, pumps it to a much higher pressure gas. The high pressure gas travels on to the condenser.

Faults/Symptoms: Symptoms include: poor or no cooling performance, abnormal noise. Faults include: leaks, insufficient or incorrect refrigerant oil, over-charge and contaminated refrigerant.

Tech Tip

Flush and dry system thoroughly before installing new compressor.

Verify the correct refrigerant oil and quantity (Oil Balance) is in the system. Compressors may or may not come filled with oil, verify total system charge after repairs.

Compressor Clutch

Description/Function: The compressor clutch is an electromagnetic device that couples the compressor shaft to the compressor pulley. When the clutch coil is energized the clutch is engaged allowing the compressor to run, when the coil is switched off the clutch opens and the compressor stops.

Faults/Symptoms: Symptoms include: poor or no cooling performance, abnormal noise. Faults include: worn clutch plate, excessive air gap, open in clutch coil, worn pulley bearing.

Tech Tip

Clutch air gap should be checked, even on a new or remanufactured compressor. Incorrect air gap can cause clutch failure.

Accumulator

Description/Function: A/C systems with orifice tube metering device will have an accumulator. The accumulator is located between the evaporator and the compressor, it serves to capture and store excess liquid refrigerant. This prevents liquid refrigerant from entering the compressor where it can damage the compressor. Also the accumulator contains a desiccant, which absorbs moisture in the system, preventing deterioration of the refrigerant oil. The accumulator also serves to control and meter refrigerant oil circulation.

Faults/Symptoms: Symptoms include: poor or no cooling performance, abnormal noise. Faults include: disintegrated desiccant bag, leaks, restrictions

Tech Tip

Always replace accumulators on systems that have been open for any period of time, or have experienced catastrophic compressor failure, or have otherwise been contaminated.

Receiver-Drier

Description/Function: A/C systems with expansion valve metering device will have a receiver-drier. The receiver-drier is located between the condenser and the expansion valve. It serves to provide a reservoir of liquid refrigerant for the expansion valve. Also the receiver drier contains a desiccant, which absorbs moisture in the system, preventing deterioration of the refrigerant oil.

Faults/Symptoms: Symptoms include: poor or no cooling performance, abnormal noise. Faults include: disintegrated desiccant, leaks, restrictions.

Tech Tip

Always replace receiver-drier on systems that have been open for any period of time, or have experienced catastrophic compressor failure, or have otherwise been contaminated.

Orifice Tube

Description/Function: The orifice tube is essentially a calibrated restriction located at the inlet to the evaporator. This causes the necessary pressure drop to allow the liquid refrigerant to evaporate within the evaporator and absorb heat. Since the orifice tube is fixed, the system is regulated by either cycling the compressor clutch or by a variable displacement compressor.

Faults/Symptoms: Symptoms include: poor or no cooling performance. Faults include: plugged orifice.

Tech Tip

Restricted orifice tube can be observed by abnormally high –high side pressures and abnormally low-low side pressures, along with short clutch cycling.

Replace orifice tubes when servicing a refrigerant loop component.

Thermal Expansion Valve TXV

Description/Function: The thermal expansion valve (TXV) is a thermally controlled valve that varies the flow of liquid refrigerant into the evaporator based on the evaporator outlet temperature. The most common design is the H-Block expansion valve; the sensing bulb is located in the evaporator outlet port, which actuates the metering valve located in the evaporator inlet port. Can be on vehicles with cycling clutch or variable displacement compressors.

Faults/Symptoms: Symptoms include: poor or no cooling performance. Faults include: restricted or stuck metering valve. Damaged capillary tube, refrigerant leaks.

Tech Tip

TXVs with remote sensing bulbs, must have the bulb in contact with the evaporator, if it comes loose the evaporator can freeze over blocking air flow.

Some older model TXVs were adjustable.

Refrigerant Hose/Line

Description/Function: The A/C system components are connected with refrigerant hoses and lines. These hoses are designed to withstand high pressures and temperatures. The hard lines are typically made from extruded aluminum or sometimes coated steel. The hose is chemical resistant and has hydraulically crimped fittings. Service ports are specifically designed for service equipment and the particular refrigerant used.

Faults/Symptoms: Symptoms include: poor or no cooling performance. Faults include: restricted hose or line, refrigerant leaks.

Tech Tip

Hose fittings typically have sealing washers or O-rings to provide a gas-tight joint. Sealing washers are installed dry, O-rings should be lubricated with mineral-type refrigerant oil only, not PAG oil, the latter is hygroscopic (attracts moisture) and will lead to fitting corrosion.

Refrigerant Pressure Sensor/Switch

Description/Function: The refrigerant system can be damaged or vent if the refrigerant pressure becomes too great or too low. Pressure switches or sensors are used to protect the system. These switches and sensors can shut-off the compressor or turn on electric radiator fans in response to system pressure.

Faults/Symptoms: Symptoms include: poor or no cooling performance. Faults include: electrical malfunction.

Tech Tip

Pressure sensors typically are monitored by a control module and can typically be observed through scan tool data. Other switches may require electrical testing according to a troubleshooting chart.

Some switches and sensors can be replaced without evacuating (removing) the refrigerant charge, others require evacuation. Refer to the service manual before attempting replacement.

Refrigerant

Description/Function: Refrigerant is the working medium of the A/C sub-system. Several types of refrigerant are or have been used in automotive application. The first was called R-12, it was used up to 1994, when it was replaced by R-134a which is still in use today. The change was due to the discovery of R-12's harmful effects on the Earth's ozone layer. Today a new refrigerant is poised to replace R-134a and it is more environmentally friendly. It is called R1234yf and is now in some new cars. All refrigerants share a characteristic of having very low boiling points, For R-134a the boiling point is -14.9°F (-26.1°C). This along with the pressure differential within the system allows the transferring of heat from the passenger cabin to the outside.

Faults/Symptoms: Symptoms include: poor or no cooling performance. Faults include: leaks or contamination.

Tech Tip

Systems should be tested with a refrigerant identifier prior to connecting evacuation equipment to verify refrigerant type and purity.

Systems contaminated with sealants or flammable gases can damage your equipment.

Refrigerant Oil

Description/Function: The compressor requires lubrication to operate, the lubrication comes from refrigerant oil. There are a variety of refrigerant oils, differing in chemical composition and viscosity. The vehicle manufacturer will specify the correct refrigerant oil and quantity to use in the system. Three common oil chemistries are: Mineral, Polyalkylene glycol (PAG) and Polyalester (POE).

Faults/Symptoms: Symptoms include: poor cooling performance, abnormal noise. Compressor failure. Faults include: Contamination or insufficient quantity in system or excessive oil charge in system.

Tech Tip

PAG oil for R-134a comes in three common viscosities: 46, 100 and 150.

Mineral oil is used in R-12 systems and for lubricating O-rings.

POE oils are not-hygroscopic.

Mineral oil is not soluble in R-134a or PAG, retrofitted vehicles must be flushed of old mineral oil.

Refrigerant Filter

Description/Function: A refrigerant filter is a service part installed on systems that experienced catastrophic compressor failure. It is intended to capture any debris or particles not removed during the flush process. They are available in various styles and fittings.

Faults/Symptoms: Symptoms include: poor cooling performance. Faults include: filter restricted.

Tech Tip

The filter is not a substitute for proper system flushing technique, it is just additional insurance.

Restricted filters will frost/sweat on the outside.