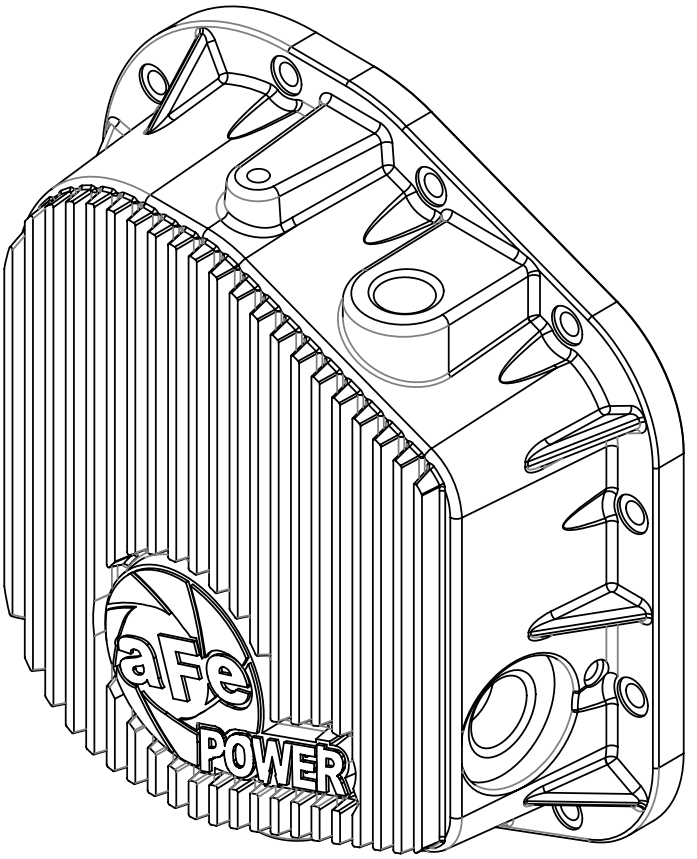

advanced *FLOW engineering*

Instruction Manual P/N: 46-70150 & 46-70152

Make: **Ford** Model: **F-150** Year: **1997-2015** Axle: **12 Bolt-9.75”**



- **Please read the entire instruction manual before proceeding.**
- **Ensure all components listed are present.**
- **Ensure you have all necessary tools before proceeding.**
- **Do not attempt to work on your vehicle when the engine is hot.**
- **Disconnect the negative battery terminal before proceeding.**
- **Retain factory parts for future use.**

Label	Qty.	Description	Part Number
A1	1	Diff. Cover - Raw, Machined Fins (46-70150)	05-60237A
A2	1	Diff. Cover - Black, Machined Fins (46-70152)	05-60237
B	1	Porthole View Gauge (Pre-installed) (46-70152)	03-50224
C	1	Plug, 6” Deep Reach, Magnet (Included in kit 46-70152)	03-50223
D	1	Plug, 1”-11.5 NPT (Included In Kit 46-70150)	03-50390
E	1	Plug, 3/4”-14 NPTF (Included In Kit 46-70150)	03-50391
F	1	O-Ring	05-60184
G	12	Socket Head Screws, 5/16”-18x1.0 (S/S)	03-50227
H	1	Plug, Square Socket Head, 3/4”-14 NPTF Magnet	03-50222
I	2	Plug, Hex Head Socket, 1/8”-27 NPT (Zn Plt)	03-50029
J	12	Flat Washers	03-50228
K	3	Brackets	05-60185
L	3	Zip Ties	05-60167

Note: Due to variances and / or modifications, it is up to the installer to make sure there is adequate clearances for the cover. Failure to do so may result in damage that is not covered by aFe’s warranty.

Installation will require the following tools:
1/2” Socket, 3/16” Allen Key, 1/4” Allen Socket Key, 3/8” Rachet, 1/2” Rachet, Torque Wrench, Oil Drain Pan, Gasket Scraper, a clean lint free rag & teflon pipe sealant tape, Factory recommended gear oil (Approx. 5 Quarts)

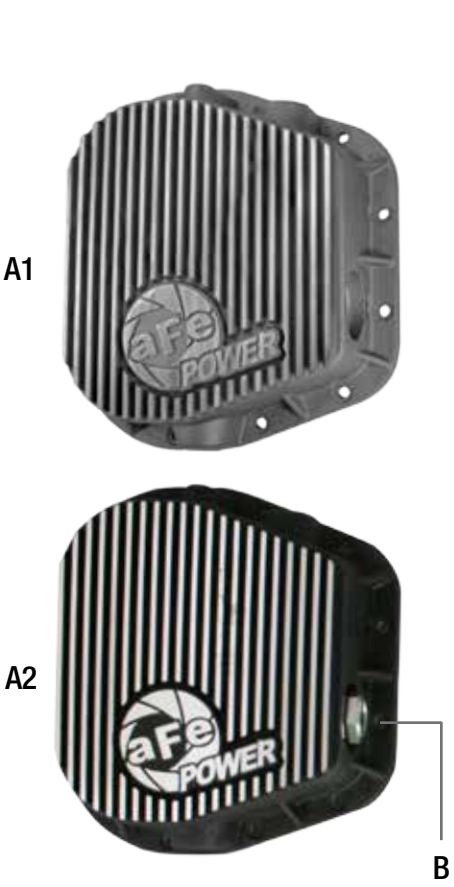
A1
A2
B
K
F
C
G
H
E
D
I
J
L



Figure A

Refer to Figure A for steps 1-5

Step 1: Park your truck on level ground and apply the parking brake.

Step 2: Position a drain pan under the differential cover.

Step 3: Remove the ABS wire from the studded bolts. (If applicable)

Step 4: Using a 1/2” socket, begin by loosening the lower 6 screws on the differential cover.

Step 5: Loosen the upper 6 screws to drain the gear oil. DO NOT remove the screws yet.

Note: You may need to pry the pan so the old fluid can start draining.



Figure B

Refer to Figure B for step 3

Step: 6 Remove all screws and allow the last of the old gear oil to drain.

Step 7: Use a clean lint free rag and wipe down the remaining oil from the housing and scrape the gasket surface clean. This surface must be clean for the O-ring to seal.

Step 8: Before installing the aFe differential cover, check the surface of the differential housing for any irregularities. Should there be any, carefully remove high spots using a smooth flat file.

DO NOT “ROUND OFF” THE FLAT GASKET SURFACE



Refer to Figure C for step 8

Step 8: Apply teflon pipe sealant tape on the threads of all the plug components before installing.

Note: Photo shows deep reach magnetic fill plug which is only included in kit part number 46-70152. If you would like to purchase the magnetic dipstick fill plug plug see aFe part number 46-00002.



Figure D

Refer to Figure D for step 9 (Skip this step if you are going to install a temperature sensing unit)
Step 9: Install 1/8" NPT plug on top of aFe differential cover (torque to 30 in. -lbs.).



Refer to Figure E for step 10

Step 10: Install 1/8” NPT plug into aFe differential cover oil level port (torque to 30 in. -lbs.).

Note: Photo shows oil level sight glass which is only included in kit part number 46-70152. If you would like to purchase the oil level sight glass see aFe part number 46-00001.



Refer to Figure F for step 11

Step 11: Install magnetic Drain plug on bottom of aFe differential cover (torque to 50 ft. -lbs.).



Refer to Figure G for step 12

Step 12: Install the supplied O-ring onto the aFe differential cover.



Figure H

Refer to Figure H for steps 13-15

Step 13: Install the aFe differential cover by aligning the bolt holes. Start one of the new socket head screws and washers in the top bolt hole. Continue around the bolt pattern until all 12 screws and washers are installed finger tight.

Step 14: If needed, remove the three (3) bolt/washers (indicated by the arrows in photo) and install the supplied brackets as shown. Use the supplied zip ties to attach the ABS wire to the brackets.

Step 15: Using the 1/4" allen wrench, tighten the socket head screws to 22-25 ft.-lbs. in a criss cross order.



Figure I

Refer to Figure I for steps 16-18

Step 16: Refill the aFe differential cover with new gear oil. Your new aFe differential cover takes about 4.5 quarts to fill.

Step 17: If your vehicle had been modified or “lifted” and the axle has been rotated, you will have to establish the correct oil level for your vehicle.

Step 18: Use aFe site glass to check oil level (Sight glass in kit 46-70152 only). If your differential cover did not come with a sight glass, remove the small 1/8” NPT “over fill” plug (shown above) and fill the differential cover until oil level reaches the plug. When the differential cover is full, excess oil will flow out of the hole. Re-install 1/8” NPT “over fill” plug when proper oil level is established.



Figure J

Refer to Figure J for step 19

Step 19: If oil level is okay, usign the 1/2” rachet install either the deep reach magnetic plug (46-70152) or the 3/4” NPT plug (46-70150) into the fill hole on the top of the cover (DO NOT OVERTIGHTEN).

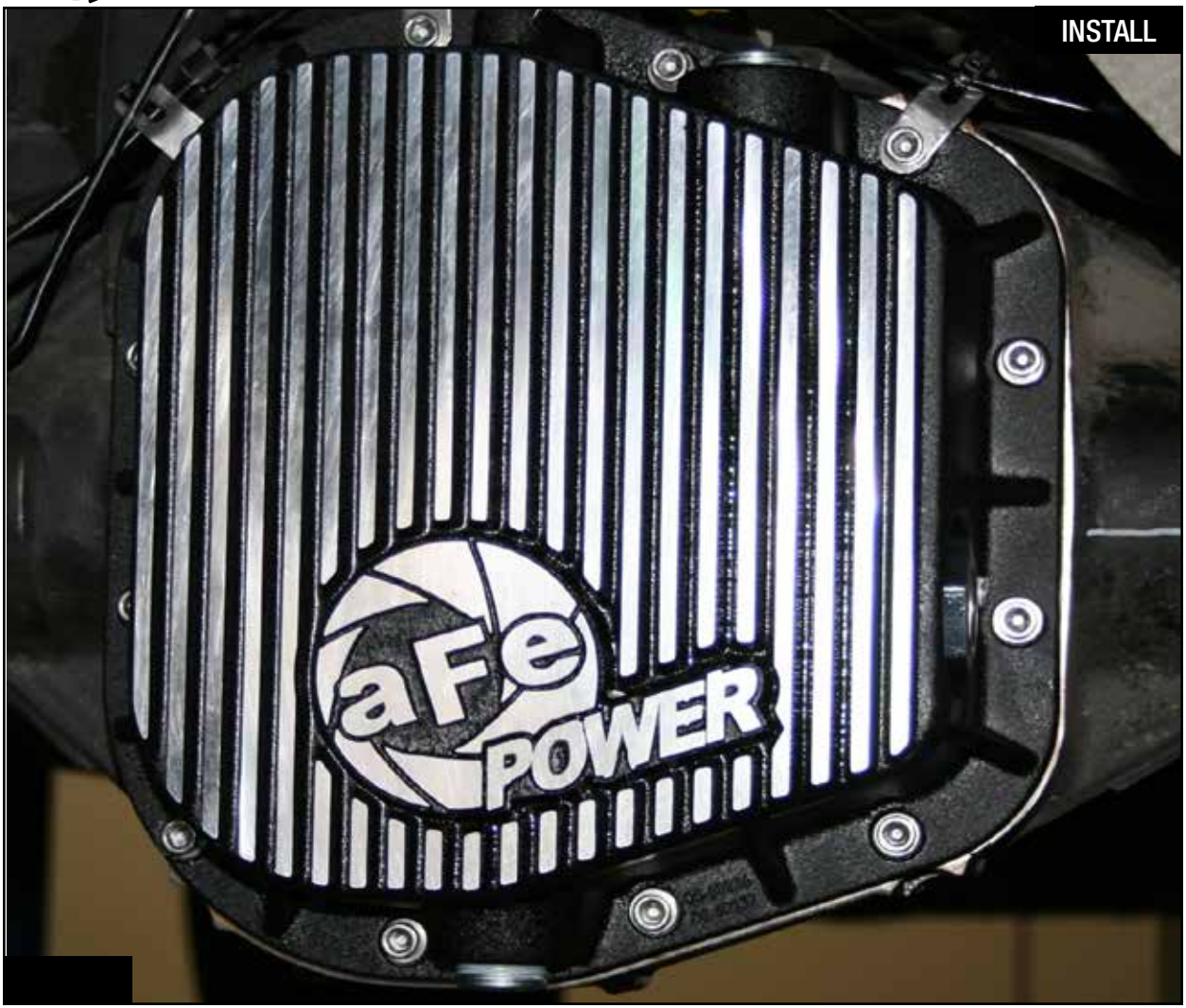

Refer to Figure K for step 20

Step 20: Your installation is now complete. Thank you for choosing aFe Power!

NOTE: Drive at least 25 miles and check the oil level using the aFe sight glass, fill and re-torque all bolts if necessary.