Installation instructions

Akrapovič Exhaust System:
Sound Kit
for the
BMW X5M (type F95)
BMW X6M (type F96)

SAFETY AND COMPLIANCE WARNING, PLEASE READ CAREFULLY

BEFORE REMOVING THE STOCK EXHAUST SYSTEM AND BEGINNING THE INSTALLATION OF YOUR NEW AKRAPOVIČ EXHAUST, PLEASE MAKE SURE THAT ALL ITEMS LISTED BELOW ARE VERIFIED:

- This manual is specific to the car indicated on the cover page, for which it is designed. Installation procedures vary depending on the type of car. Please verify that the Akrapovič **exhaust system and this installation manual correspond to the type of your car.**
- The exhaust system can get extremely hot during and after it is used. Make sure not to touch the exhaust system until it is completely cool. **Allow the exhaust and engine to cool down before beginning installation.**
- Make sure the car is **securely positioned to prevent** damage to yourself ond other, or the car.
- Please check the parts you recieved against the parts list available on our website. Make sure that you have **all the parts necessary for the installation** of your new Akrapovič exhaust system. If any of the parts is missing, please do not proceed with uninstalling your stock exhaust system/installing the Akrapovič exhaust system and contact the retailer where you purchased the Akrapovič exhaust system.
- Every exhaust system muffler has its unique serial number, which identifies the authenticity of the product. You can find the serial number on the muffler's sleeve. Please refer to the **picture 1** below. Please verify that your exhaust system is an original Akrapovič product. If you have any doubts, please contact the reseller where you purchased the exhaust system or Akrapovič partners. This manual, any certificates and Akrapovič warranty apply to original products only.

GENERAL NOTE

Photographs and other illustrations in this manual are symbolic and are intended to help represent individual steps for proper installation and use, as well as for a general overview. The actual component parts of the Akrapovič exhaust system may not entirely correspond to the photographs and other illustrations.

Picture 1 - Serial Number Position

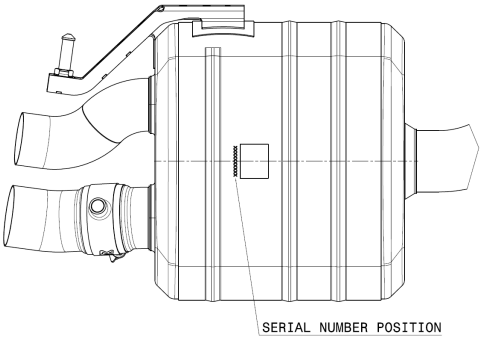

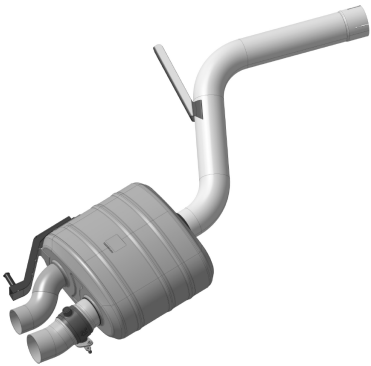

NOISE AND EMISSION WARNINGS

General warning

Because of the world-wide distribution of Akrapovič d.d. products, neither Akrapovič d.d. nor any of its subsidiaries make any representation that the exhaust system complies with the air and/or noise emissions laws, or labeling laws, of any jurisdiction. The purchasers are entirely responsible for informing themselves of the applicable laws where the products are to be used and to comply with those law.

USA WARNING

Various U.S. states and the U.S. federal government have individual laws regulating the use of aftermarket exhaust parts and systems, especially as those parts and systems modify, remove, or replace original equipment catalysts. Please consult the appropriate laws in your area before installing any aftermarket part or system on your vehicle to ensure compliance with all applicable laws. Neither Akrapovic d.d. nor any of their subsidiaries or the sellers of the parts or systems make any representation that any of their parts or systems comply with any such laws.

CALIFORNIA WARNING

California laws prohibit the use of any aftermarket exhaust part or system that modifies, removes or replaces original equipment catalysts unless the California Air Resources Board has issued an Executive Order regarding such part or system or unless the part or system is exempted by being used only on racing vehicles on closed courses. Neither Akrapovic d.d. nor any of their subsidiaries make any representation that any of their parts or systems has received such an Executive Order or that any of their parts or systems conform with the racing vehicles exemption. The purchasers are entirely responsible for informing themselves of applicable California laws and to comply with those laws.

SYMBOLS

The following symbols are used throughout these installation instructions:

TOOLS AND PROTECTIVE EQUIPMENT REQUIRED

TIGHTENING TORQUE

LUBRICATION

HAND TIGHTEN

INSTALLATION TIP

CAUTION OR IMPORTANT

USE BOLT SEALANT

Apply 3 to 4 small drops of bolt sealant onto the cleaned and degreased threads before tightening the bolts.

WARNING! Avoid contact with skin, eyes and mucous membranes. Do not inhale fumes. Keep out of reach of children.

USE ANTI-SEIZE LEAD-FREE COPPER PASTE (black tube)

Provides trouble-free and long-lasting protection against seizing, corrosion and rusting of bolts, threaded ends, nuts, joints, etc. Also protects against vibration, wear and impact. **WARNING! Avoid eye contact. Keep out of reach of children.**

USE ANTI-SEIZING GREASE (white tube)

Prevents seizing, corrosion and excessive wear between the titanium components of your exhaust system. **WARNING! Avoid eye contact. Keep out of reach of children.**

Tools & equipment

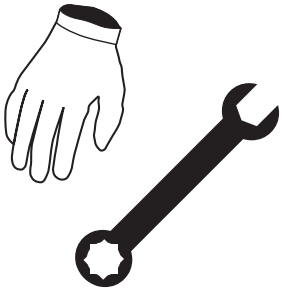

- **mechanic gloves**
- **eye protection**
- **Torx 20**
- **Torx 40**
- **T-handle 8 mm wrench**
- **T-handle 10 mm wrench**
- **Flat screwdriver**
- **Small cross head screwdriver**
- **Cutting nippers**

PARTS LIST

The following parts should be found in the box:

- Installation Manual
- Homologation certificate/ compliance documents if applicable
- Warranty
- Fitting material
- Muffler, pipes, Carbon Fiber components or Sound Kit components

IMPORTANT: The car should be in the off position throughout the dismounting and installation process, as well as any other work done on the exhaust system!

REMOVAL OF STOCK EXHAUST SYSTEM:

The process of uninstalling the original exhaust system may vary depending on the existing exhaust system. Please follow the original exhaust system manufacturer's instructions for uninstalling the original exhaust system.

If you for any reason decide otherwise, please note that any information provided in this respect herein should be considered as general information provided for your convenience only. Akrapovič shall not assume any liability or responsibility with regard to uninstalling your existing exhaust system, warranty coverage of such exhaust system or vehicle or their further fitness for use.

In case your Akrapovič exhaust system may not be used on certain roads or under certain conditions, please keep the stock or other exhaust system that you can use in such circumstances legally.

INSTALLATION OF THE AKRAPOVIČ SOUND KIT:

1. Open the trunk, remove the trunk floor panel, loading sill cover and right trunk trim panel, to get access to Akrapovič Control Kit; check the Akrapovič Slip-On exhaust system installation manual for details **(F 01).**

! CAUTION: make sure not to injure yourself or damage any part of the vehicle during this process!

F 01

2. The Sound Kit components **(F 02):**

1 - Sound Kit receiver

2 - Remote Controller

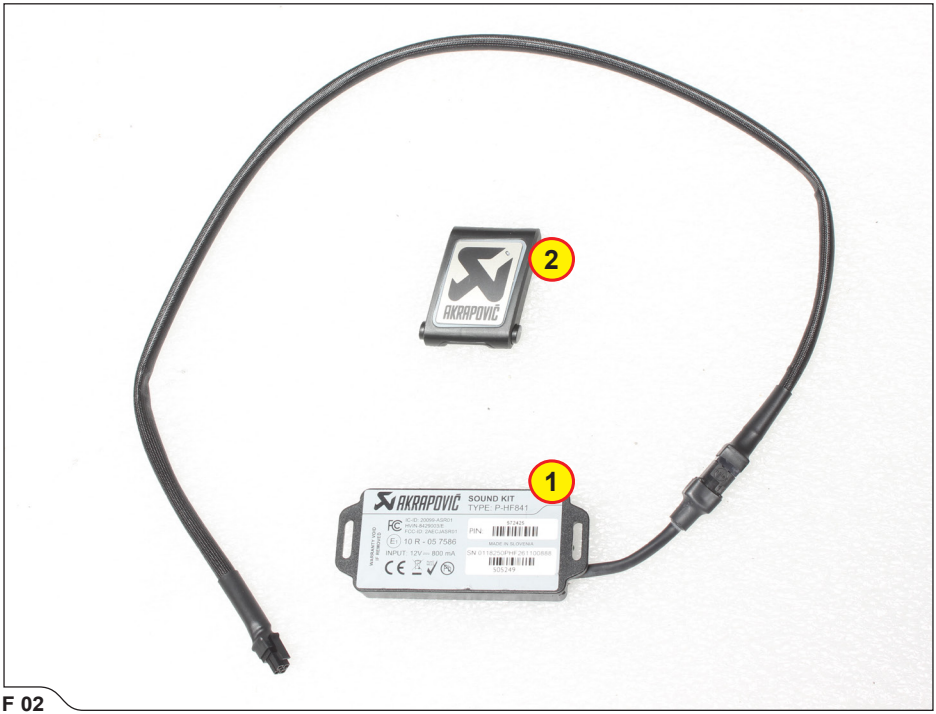

F 02

3. Tuck in the Sound Kit receiver as shown and secure the connecting cable, using tie wraps from Akrapovič installation kit **(F 03, 04).**

! CAUTION: make sure not to damage any part of the vehicle during this process!

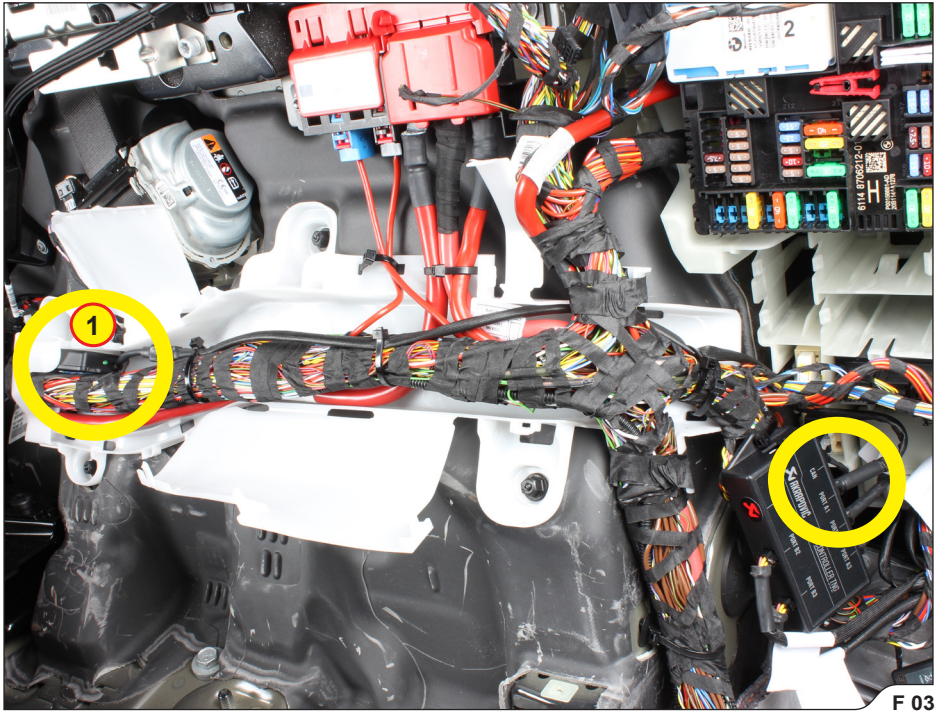

F 03

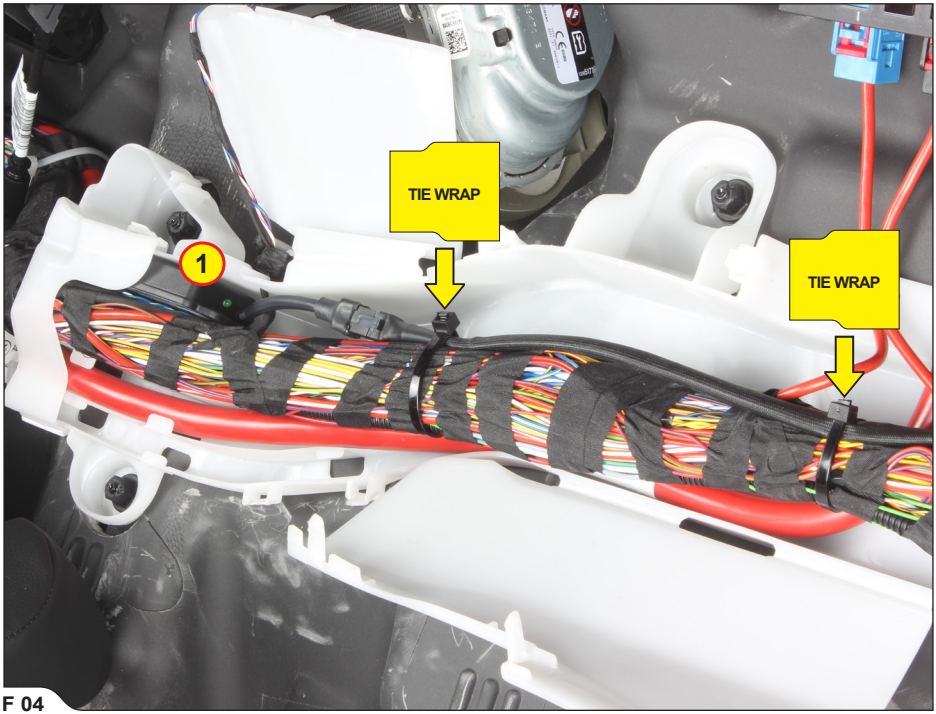

F 04

4. Connect the Sound Kit receiver to the Controller TNG unit **(F 05).**

! CAUTION: make sure not to damage the Sound Kit, Control Kit or any part of the vehicle during this process!

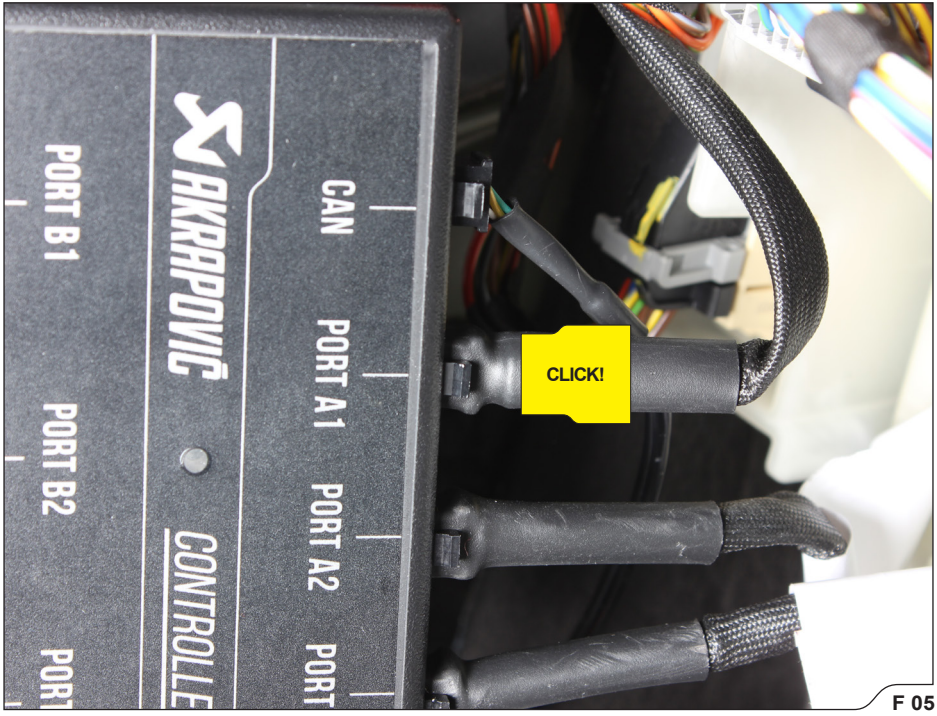

F 05

5. Reassemble the trunk trim in reverse order; check vehicle manufacturer manual for correct procedures **(F 06).**

! IMPORTANT: check the User Manual provided in the installation kit for correct Remote Controller usage!

F 06

FINAL INSTALLATION:

! **IMPORTANT: reinstall the dismounted or partially removed stock parts (wheel arches, bumper etc.); check vehicle manufacturer manual for tightening torques.**

! **IMPORTANT: make sure all the nuts and bolts are sufficiently tightened. In case the exhaust system touches the cowling or other parts, repeat the adjustment of the exhaust system or contact your authorized dealer.**

! **IMPORTANT: clean all exhaust components before the first start of the engine or the stains will burn onto the surfaces!**

MAINTENANCE OF THE AKRAPOVIČ EXHAUST SYSTEM:

1. Clean the titanium exhaust components with a multi-purpose spray lubricant (WD-40® or equivalent)*, carbon fiber exhaust components with soft and dry cloth and stainless steel components with soft cloth sprayed with contact cleaner, then wipe with soft and dry cloth. A change in the color of the exhaust system is normal due to high temperatures.
2. Periodically make sure all the bolts and springs are sufficiently tight.

*WD-40® is a trademark of the WD-40 Company.

INSTALLATION TIP: IT IS NORMAL FOR WHITE SMOKE TO COME OUT OF THE MUFFLER AT FIRST OPERATION.

! **CAUTION: DO NOT STAND BEHIND THE MUFFLER AT ANY TIME.**

! **CAUTION: DO NOT USE AUTOMOTIVE WHEEL CLEANERS OR ANY CLEANING PRODUCTS WHICH CONTAIN ACIDIC ADDITIVES TO CLEAN THE AKRAPOVIČ EXHAUST SYSTEMS.**

WARNING: THE EXHAUST SYSTEM CAN BE EXTREMELY HOT. ALLOW THE EXHAUST AND ENGINE TO COOL DOWN BEFORE BEGINNING INSTALLATION OR ANY OTHER WORK ON THE EXHAUST SYSTEM. THIS MANUAL IS SPECIFIC TO THE BMW X5M TYPE F95. THERE MAY BE SOME DIFFERENCES IN INSTALLATION PROCEDURES FOR OTHER MODELS.

TROUBLESHOOTING:

Problem	Possible cause	Solution
Remote Controller not working (red blinking then withe blinking)	Pairing process not successful	Do again the pairing process – check user manual
White LED blinking on the Sound Remote Controller	No communication with the receiver	While pressing on the Remote Controller, check if the green LED of the Sound Kit Receiver is green. If yes, then try to put the Sound Kit receiver in another position.
Red LED blinking on the Sound Remote Controller	There is communication with the receiver but there is some issue with the valve system	Switch off the car. Wait one minute and switch on the car.