AMP RESEARCH BedStep®
MADE IN USA

PART # 75307-01A
Toyota Tacoma 2005 - up

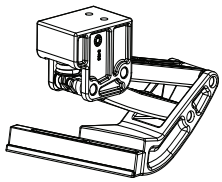
20-03435-10

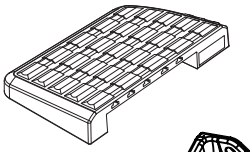
19-03593-90

19-03560-90

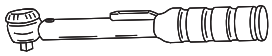
Torque wrench

19-03237-90

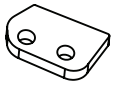
20-03744-90

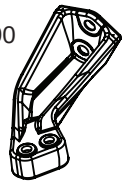
15-03736-90

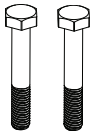
19-03429-90

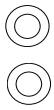
19-02486-90

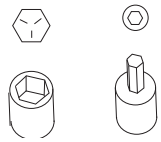
17mm 3/16”

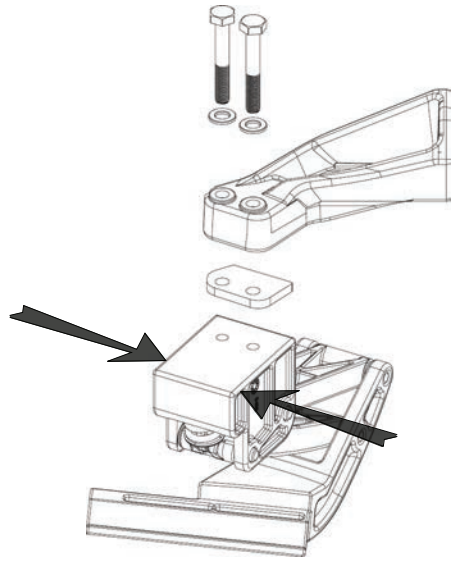
1

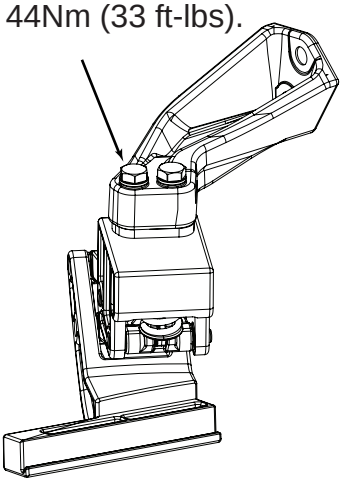

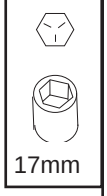

2

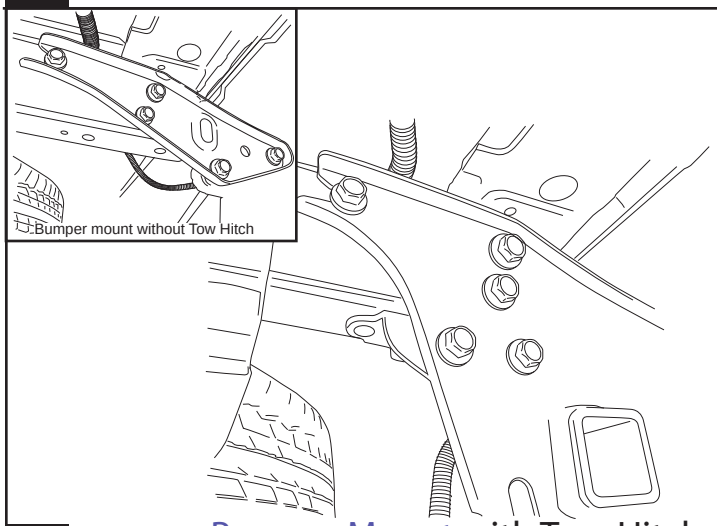

3 Bumper Mount with Tow Hitch

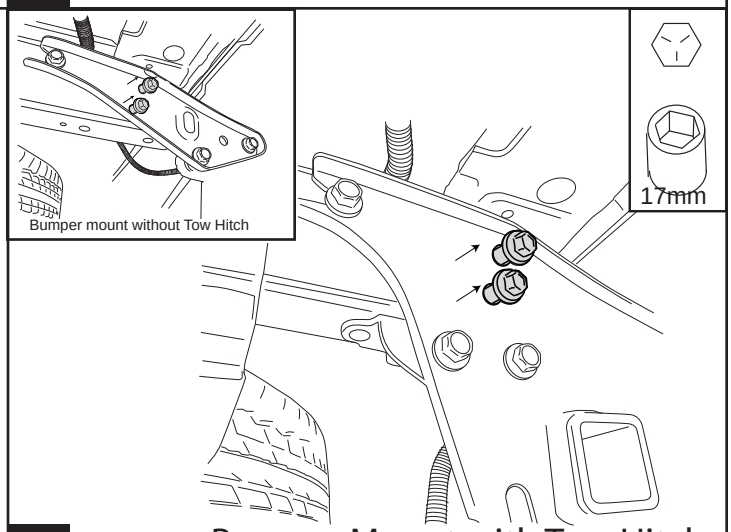

4 Bumper Mount with Tow Hitch

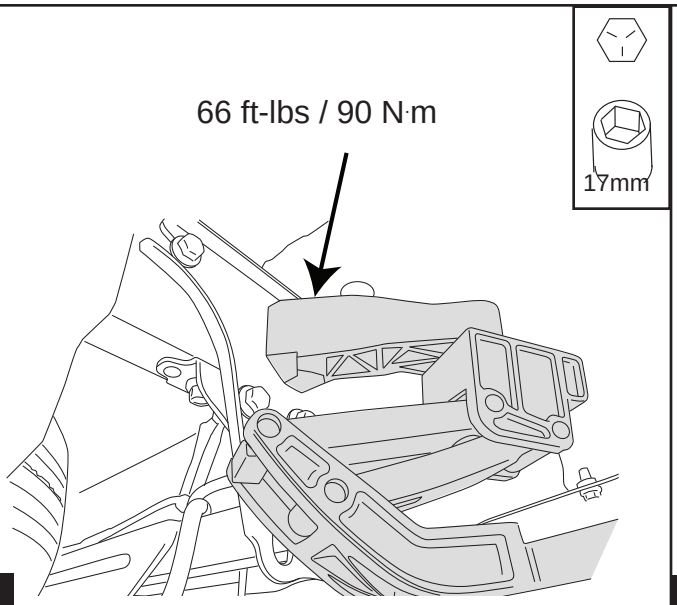

5

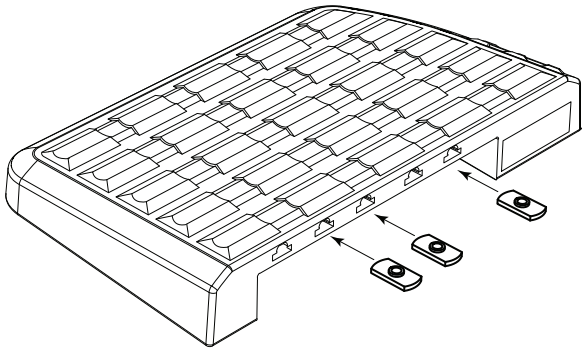

6

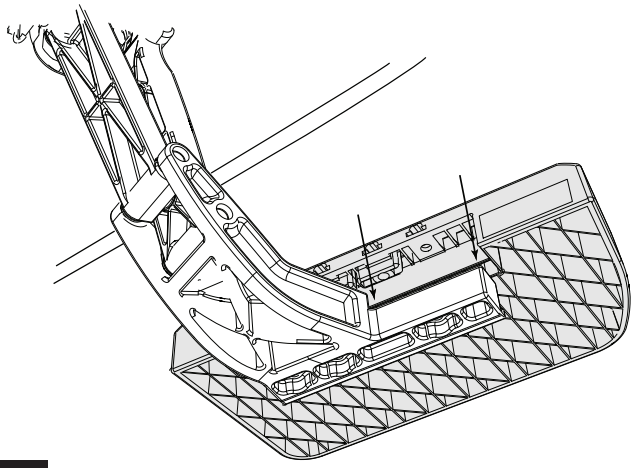

7

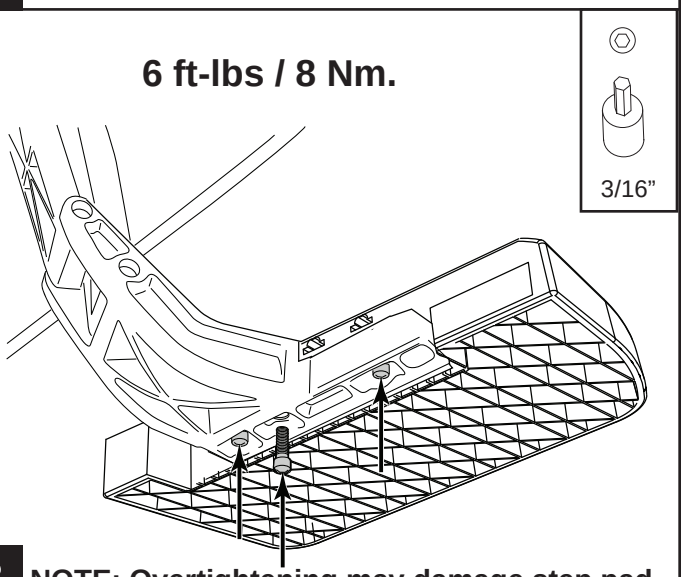

8 **NOTE: Overtightening may damage step pad**

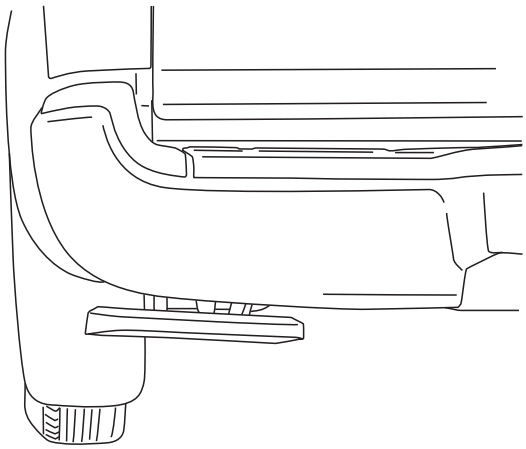

9

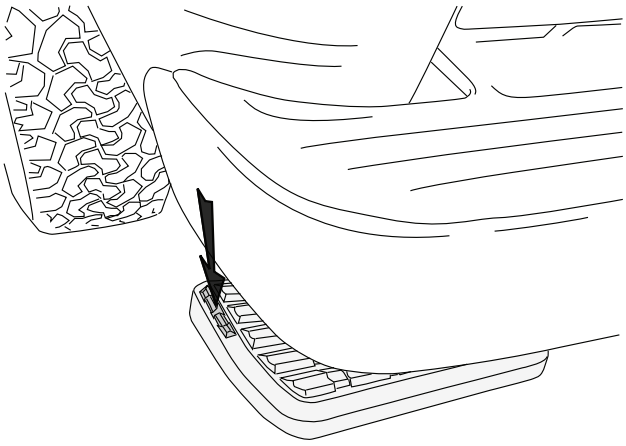

10