AMP RESEARCH BedStep®
MADE IN USA

Ford F-150 2015

PART NUMBER:
AMP 75312-01A

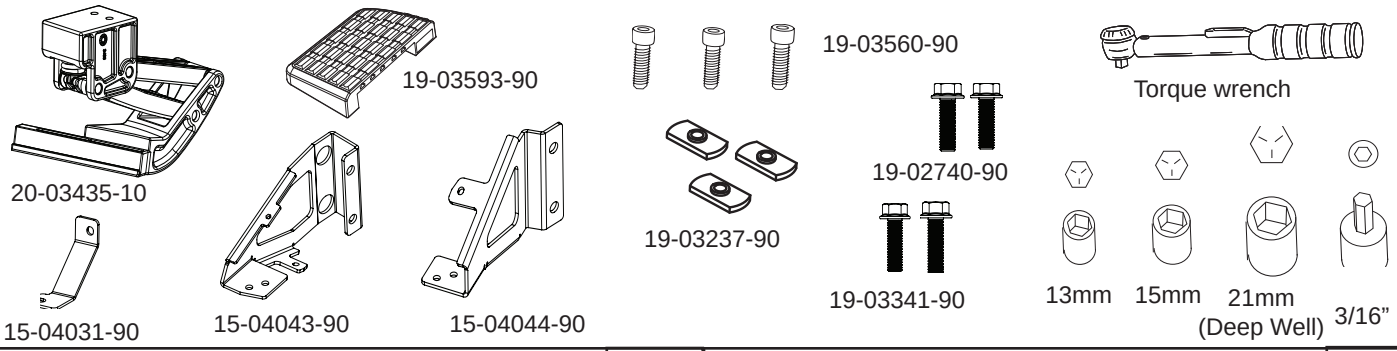

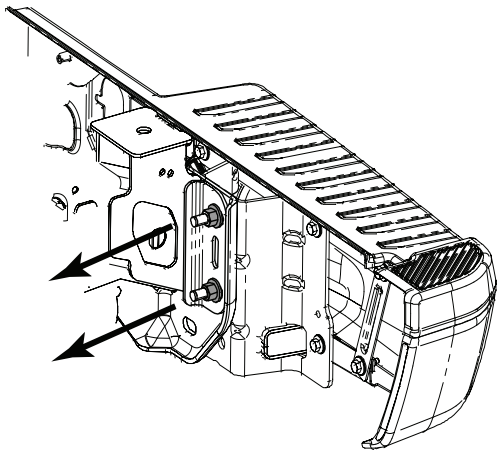

1 Remove Nuts shown above

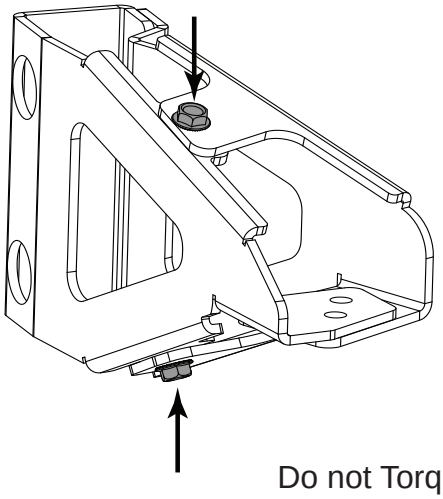

2 Do not Torque!

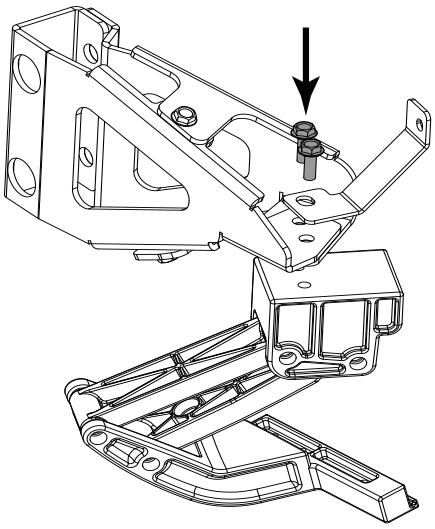

3

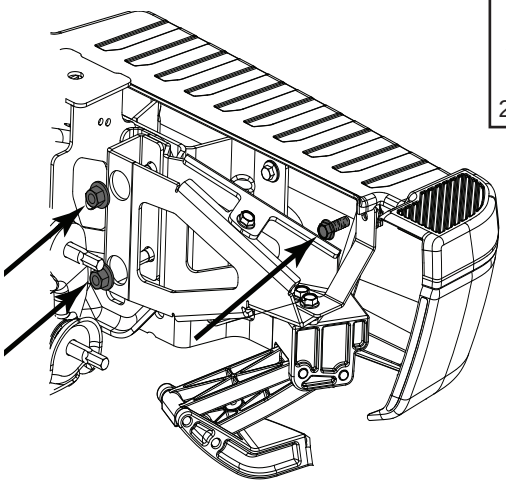

4

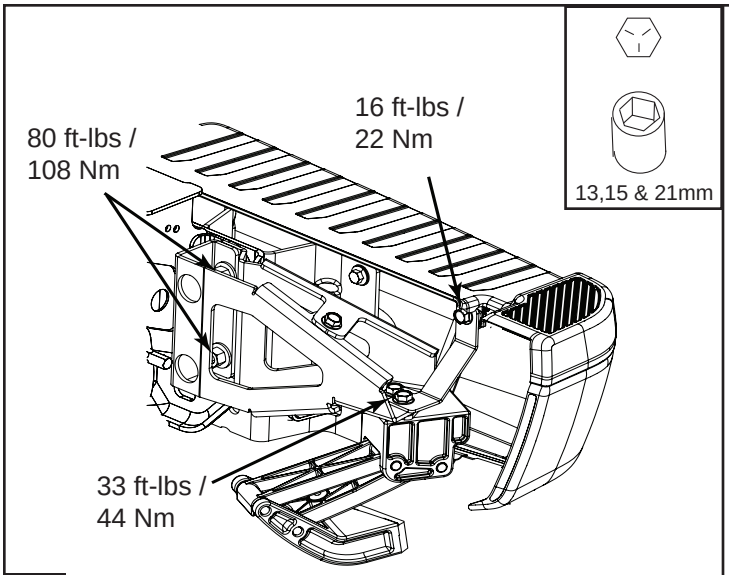

5

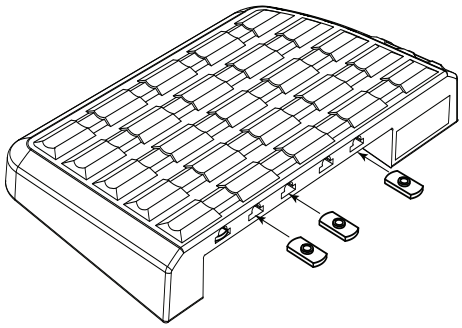

6

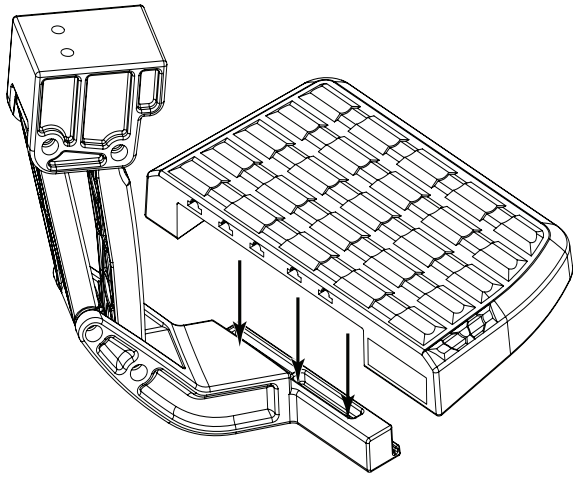

7

6 ft-lbs / 8 Nm

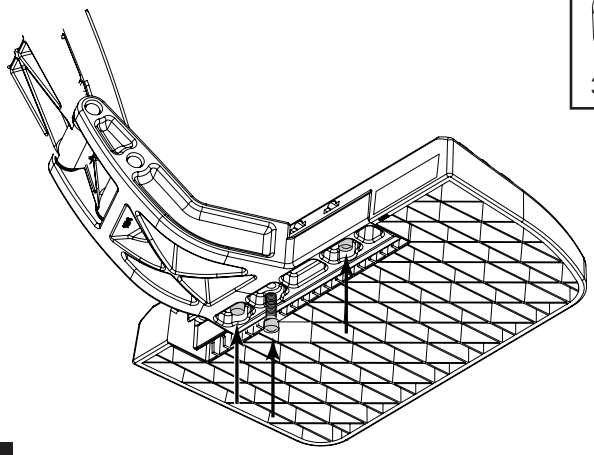

8

NOTE: Overtightening may damage step pad

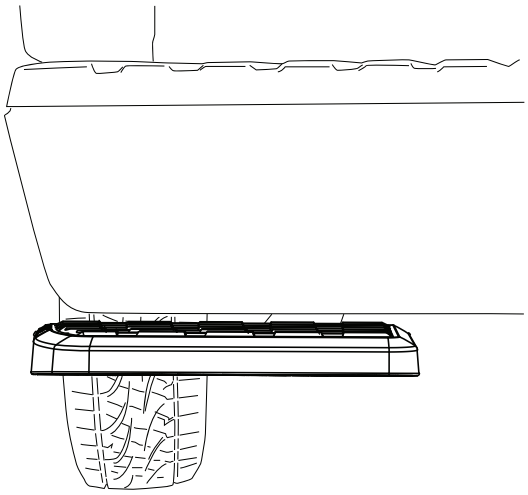

9

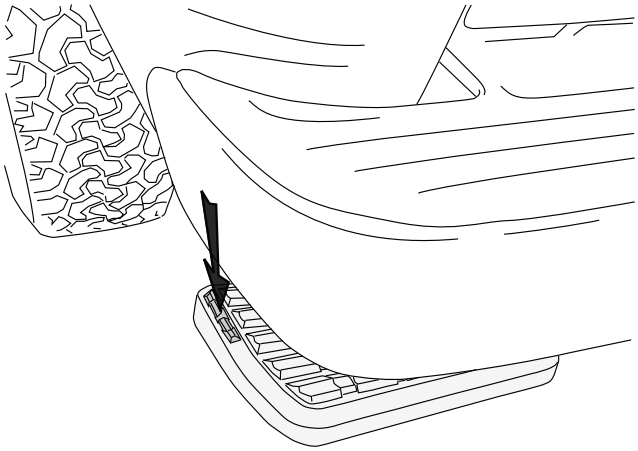

10