B&W Trailer Hitches

NOTE: *we recommend reading instructions before beginning the installation.* **Heavy Duty Receiver Hitch Installation**

Model HDRH25189N

Vehicle Make and Years

2001-2010 Chevy/GMC 3/4, and 1 Ton HD long bed trucks with factory bumper

PARTS LIST

ID	DESCRIPTION	QUANTITY
1	- HITCH CENTER SECTION	1
2	- DRIVER SIDE PLATE	1
3	- PASSENGER SIDE PLATE	1
4	- TRAILER PLUG BRACKET	1
5	- ½-13 X 2" HEX HEAD CAP SCREW	4
6	- ½-13 X 1-1/2" HEX HEAD CAP SCREW	8
7	- ½-13 HEX FINISH NUT	12
8	- ½" SPLIT LOCK WASHER	12
9	- SPACER 3/16 X 1 X 1½	4
10	- SPACER 3/16 X 1¼ X 1½	2
11	- SPACER 3/16 X 1½ X 3	2
12	- #14 X 3/4 SHEET METAL SCREW	2

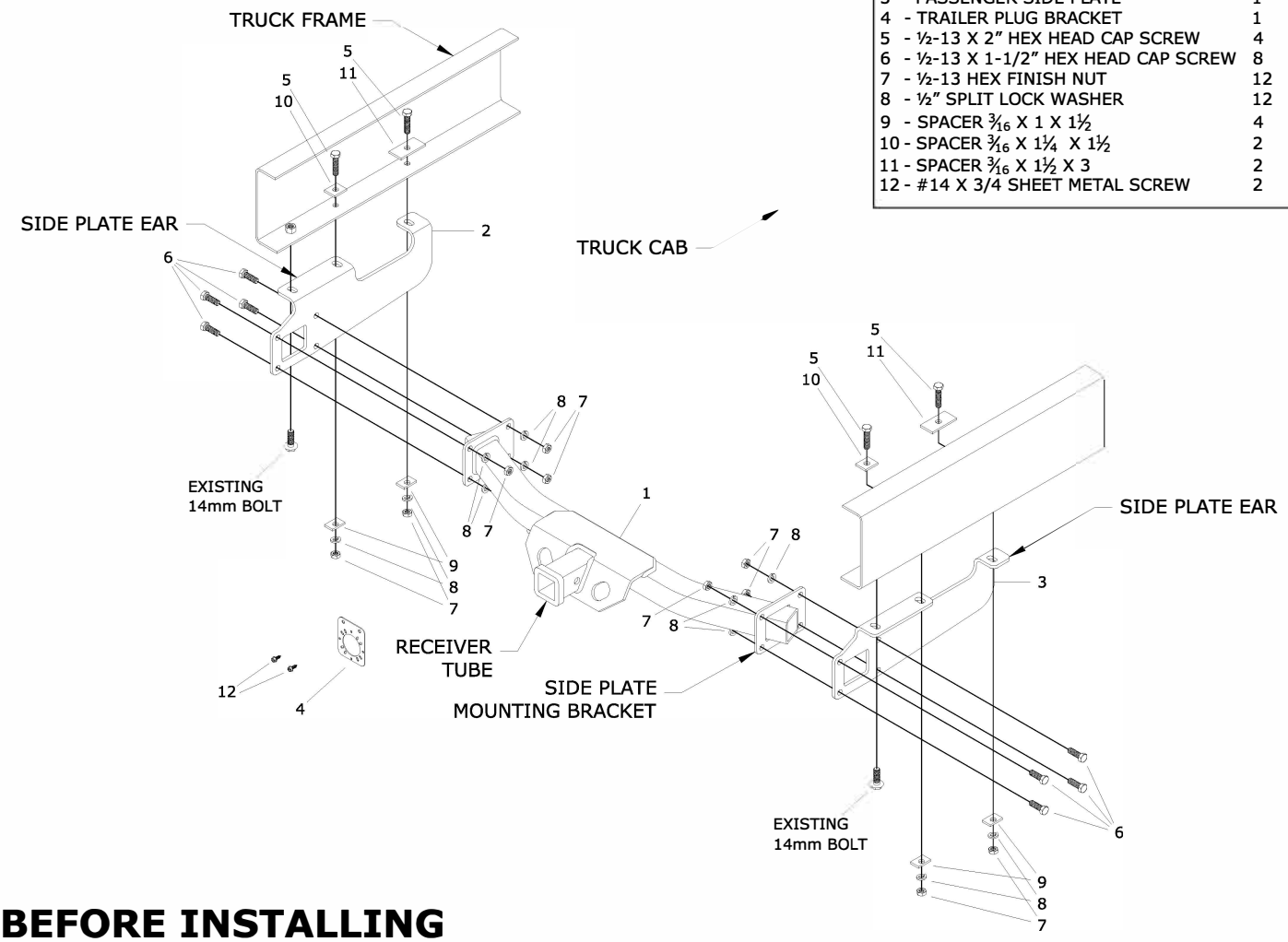

BEFORE INSTALLING

WARNING

Although this hitch contains a V-5 rating of 16,000 lb. WC, the tow vehicle manufacturers recommended towing capacities should under NO circumstances be exceeded.

WARNING

B&W Receiver Hitches are designed to fit vehicles as produced by the factory. Any equipment or accessories added to the vehicle may affect the fit of the hitch. B&W will not warranty the hitch if any alterations are made during the installation process. Occasionally there are rare vehicle options that may prohibit the hitch from installing properly. Please contact the manufacturer for support if this is the case.

WARNING

Always use safety chains while towing. Crossing the safety chains under the tongue of trailer may prevent some damage to the trailer if detachment occurs.

WARNING

Periodically inspect hitch, making sure that all fasteners are tightly secured.

BEFORE INSTALLING

This receiver hitch may require slight modification to the frame or other structure of the vehicle such as drilling or relocating equipment so that the hitch may be installed in the proper location. It is very important to make sure that you have the correct hitch for your application before any modifications to the vehicle are made.

Remove the 14mm bolts from the rear of the frame as shown in the main diagram. The bolts will be used for installing the hitch. Any brackets or accessories not critical to the structure of the vehicle that are mounted to the bottom of the frame at the rear may need to be removed. See the steps on positioning and mounting the hitch for the hitch location to see if there will be any interference. Bumper reinforcement brackets can be removed if the bumper will not be used for towing.

Be sure that the vehicle frame where the hitch will mount is free from debris or other material that may interfere with the installation.

STEP 1: HITCH ASSEMBLY

Assemble the hitch as shown on the main diagram using the ½" x 1-½" long bolts, lock washers and nuts. Attach the side plates to the hitch center section with the "ears" of the side plates toward the outside as shown in the main diagram. Do not fully tighten the hardware at this time.

STEP 2: POSITIONING HITCH

Position the hitch under the frame as shown in the main diagram. Align the slots in the rear most side plate ears with the holes where the 14mm bolts were previously. Secure the hitch into place by reinstalling the 14mm bolts. Make sure that the hitch is centered between the frame rails of the vehicle and that the receiver tube is parallel to the centerline of the truck.

STEP 3: MOUNTING HITCH

Install hardware as shown in the main diagram, fastening the hitch to the frame. Be sure to place each spacer in its proper location as shown on the main diagram.

STEP 4: TIGHTENING HARDWARE

Tighten the hardware on the connections between the frame and the side plates first. Torque the ½" bolts to 80 foot pounds and the 14mm bolts to 135 foot pounds. Next make sure that the edges of the side plate mounting brackets on the center section match up with the bottom and rearward edges of the side plates and tighten these connections. Torque these bolts to 80 foot pounds as well. Replace the spare tire.

STEP 5: OPTIONAL BRACKET INSTALLATION

An optional trailer plug mounting bracket has been included with this hitch. If your vehicle does not have a place to mount the trailer wiring receptacle, this bracket will accept many different receptacles on the market. Mount the bracket using the two self-tapping sheet metal screws as shown in diagram 5.1. Be aware of ground clearance limitations that this wiring plug bracket or any other may add to the hitch.

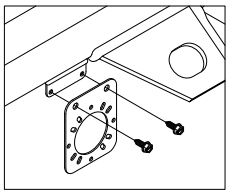

FIGURE 5.1