CLAYTON OFF ROAD
COR-2909025
JEEP WRANGLER 2.5" PREMIUM LIFT KIT (2018 & UP, JL)

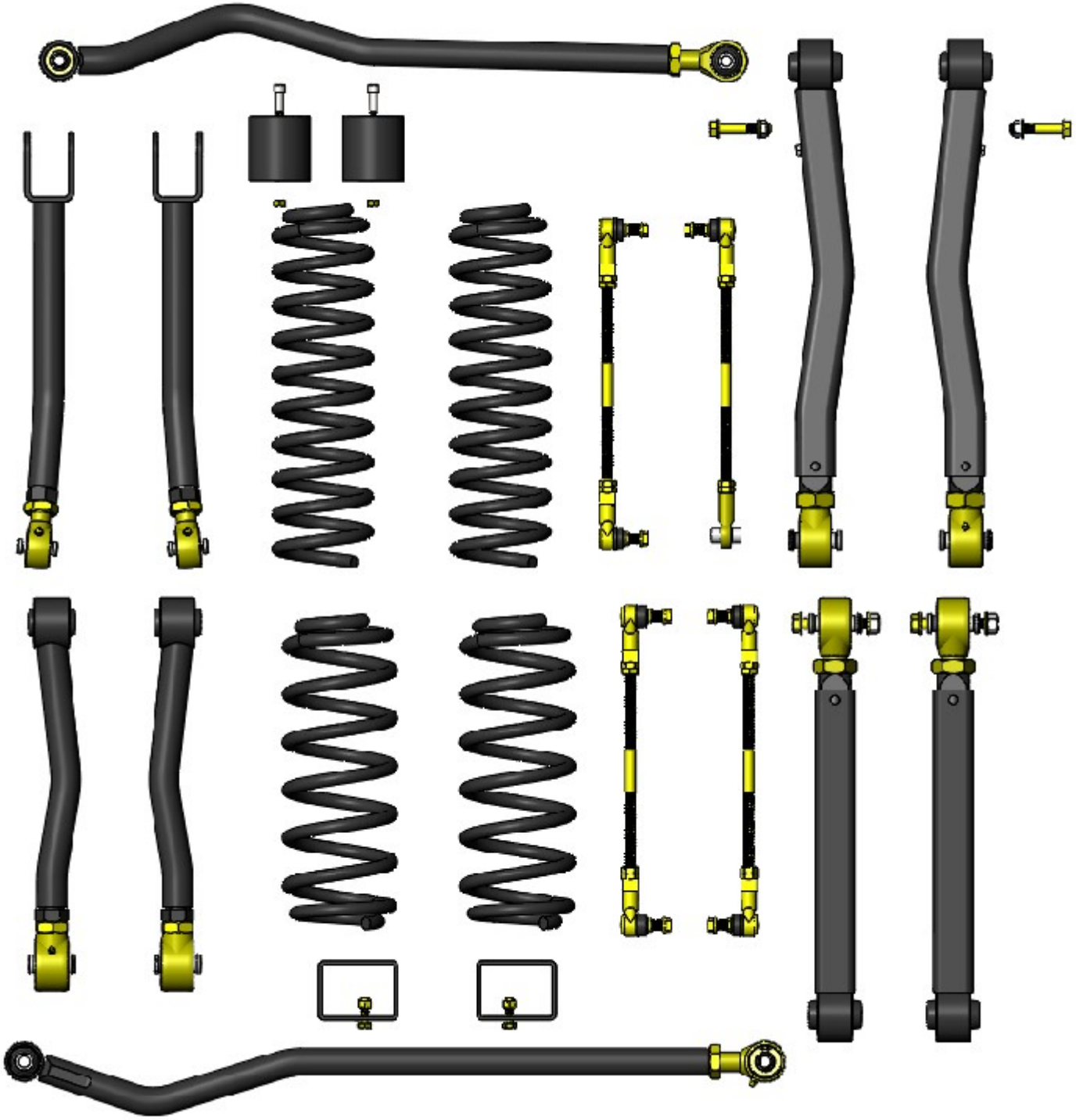

NOTES: This product may require general welding, fabrication and automotive mechanic skills. Welding should only be done by a competent welder. Clayton Off Road implies no guarantees or warranties and is not liable for improper installation. Some grinding and fitment may be required when installing this product. Every vehicle varies slightly and some fabrication may be required.
For more information please visit our website.

Recommended starting lengths for track bars and control arms. These lengths can be adjusted as needed for caster angle, drive shaft angles and tire clearance. Please make sure to not exceed the maximum length of the control arms or track bars.

Lift Height >	Stock	2 Door 2.5" Lift	2 Door 3.5" Lift	2 Door 4.5" Lift	4 Door 2.5" Lift	4 Door 3.5" Lift	4 Door 4.5" Lift
Suspension Component							
Front Lower Control Arms	24.000	24.314	24.500	24.725	24.314	24.500	24.725
Front Upper Control Arms	20.185	20.274	20.401	20.576	20.274	20.401	20.576
Rear Lower Control Arms	19.765	20.000	20.000	20.000	20.000	20.000	20.000
Rear Upper Control Arms	17.425	17.875	17.875	17.875	17.500	17.500	17.500
Front Track Bar	33.779	34.090	34.251	34.440	34.090	34.251	34.440
Rear Track Bar	37.587	37.860	38.003	38.173	37.860	38.003	38.173

Refer to individual product part number instructions.

Step 1: Position front of vehicle on jack stands or complete vehicle on lift.
Step 2: Support front axle.
Step 3: Remove front tires.
Step 4: Loosen front track bar bolts.
Step 5: Remove heat shields and loosen upper and lower control arm bolts.
Step 6: Loosen front upper and lower control arm bolts.
Step 7: Remove front sway bar links.
Step 8: Remove front shocks.
Step 9: Remove two brake line clip bolts on both sides.
Step 10: Unclip and disconnect all wires going to the front axle.
Step 11: Lower front axle.
Step 12: Remove front springs.
Step 13: Remove front upper and lower control arms on one side.
Step 14: Install front lower control arm part number COR-1809100 with curve facing in for tire clearance.
Step 15: Install front upper control arm part number COR-1809101 with curve away from the frame.
Step 16: Repeat steps 13 and 15 on other side.
Step 17:Remove front track bar.
Step 18: Install front track bar part number COR-4509100.
Step 19: Install front bump stops part number COR-1408100.
Step 20: Install front springs part number COR-1508250 or COR-1508350 depending on lift height.
Step 21: Install front shocks.
Step 22: Install front sway bar links part number COR-5109100.
Step 23: Install two brake line clip bolts on both sides.
Step 24: Clip and connect all wires going to the front axle.
Step 25: Install front tires.
Step 26: Position rear of vehicle on jack stands or complete vehicle on lift.
Step 27: Support rear axle.
Step 28: Remove rear tires.
Step 29: Loosen rear track bar bolts.
Step 30: Loosen rear upper and lower control arm bolts.
Step 31: Remove brake line clip bolts on both sides and unbolt parking brake cables.
Step 32: Unclip and disconnect all wires going to the rear axle.
Step 33: Remove rear sway bar links.
Step 34: Remove rear shocks.
Step 35: Lower rear axle.
Step 36: Remove rear springs.

Refer to individual product part number instructions.

Step 37: Remove rear upper and lower control arms on one side.
Step 38: Install rear lower control arm part number COR-1809102 .
Step 39: Install rear upper control arm part number COR-1809103.
Step 40: Repeat steps 37 and 39 on other side.
Step 41: Remove rear track bar.
Step 42: Install rear track bar part number COR-4509110.
Step 43: Install rear bump stops part number COR-1409200.
Step 44: Install rear springs part number COR-1509251 or COR-1509351 depending on lift height.
Step 45: Install rear shocks.
Step 46: Install rear sway bar links part number COR-5109110.
Step 47: Install brake line clip bolts on both sides and bolt in parking brake cables.
Step 48: Clip and connect all wires going to the rear axle.
Step 49: Install rear tires.
Step 50: With vehicle sitting at ride height center both front an rear axles under the vehicle by adjusting the front and rear track bars.
Step 51: In the next 2 steps it is very important to set the caster and pinion angle with a jack with the bolts at one end removed then adjust the length of the upper control arms so they are loaded up equally when the jack is removed.
Step 52: Adjust length of front upper arms to have a caster angle of 4.8 degrees. This angle should be within plus or minus 1.00 degrees.
Step 53: Adjust rear pinion angle to keep lower spring perches aligned with upper spring perches. On 2 door models it will be necessary to roll the pinion up to avoid the rear drive shaft from binding on full droop.
Step 54: Tighten all track bar and control arm bolts.
Step 55: Tighten all track bar and control arm jam nuts.

Clayton Off Road
COR-1809100
Jeep Wrangler Short Front Lower Control Arms (2018 & Up, JL)

NOTES: This product may require general welding, fabrication and automotive mechanic skills. Welding should only be done by a competent welder. Clayton Off Road implies no guarantees or warranties and is not liable for improper installation. Some grinding and fitment may be required when installing this product. Every vehicle varies slightly and some fabrication may be required.
For more information please visit our website.

Refer to pictures below.

Step 1: Remove old control arm on one side.
Step 2: Remove shock bolt.
Step 3: Position axle.
Step 4: Measure length from axle side mount to frame side mount.
Step 5: Adjust control arm to length and run jam nut up to control arm tube insert.
Step 6: Install new control arm with adjustment end on frame.
Step 7: Install control arm bolts and nuts.
Step 8: Torques both bolts to 190 ft-lb.
Step 9: Tighten jam nut using a 46mm or 1-13/16" wrench.
Step 10: Make sure Johnny Joint at frame side is centered in bracket.
Step 11: Bolt brake line clip to control arm.
Step 12: Install new shock bolt, nut and washer.
Step 13: Repeat steps 1 to 12 on other side.

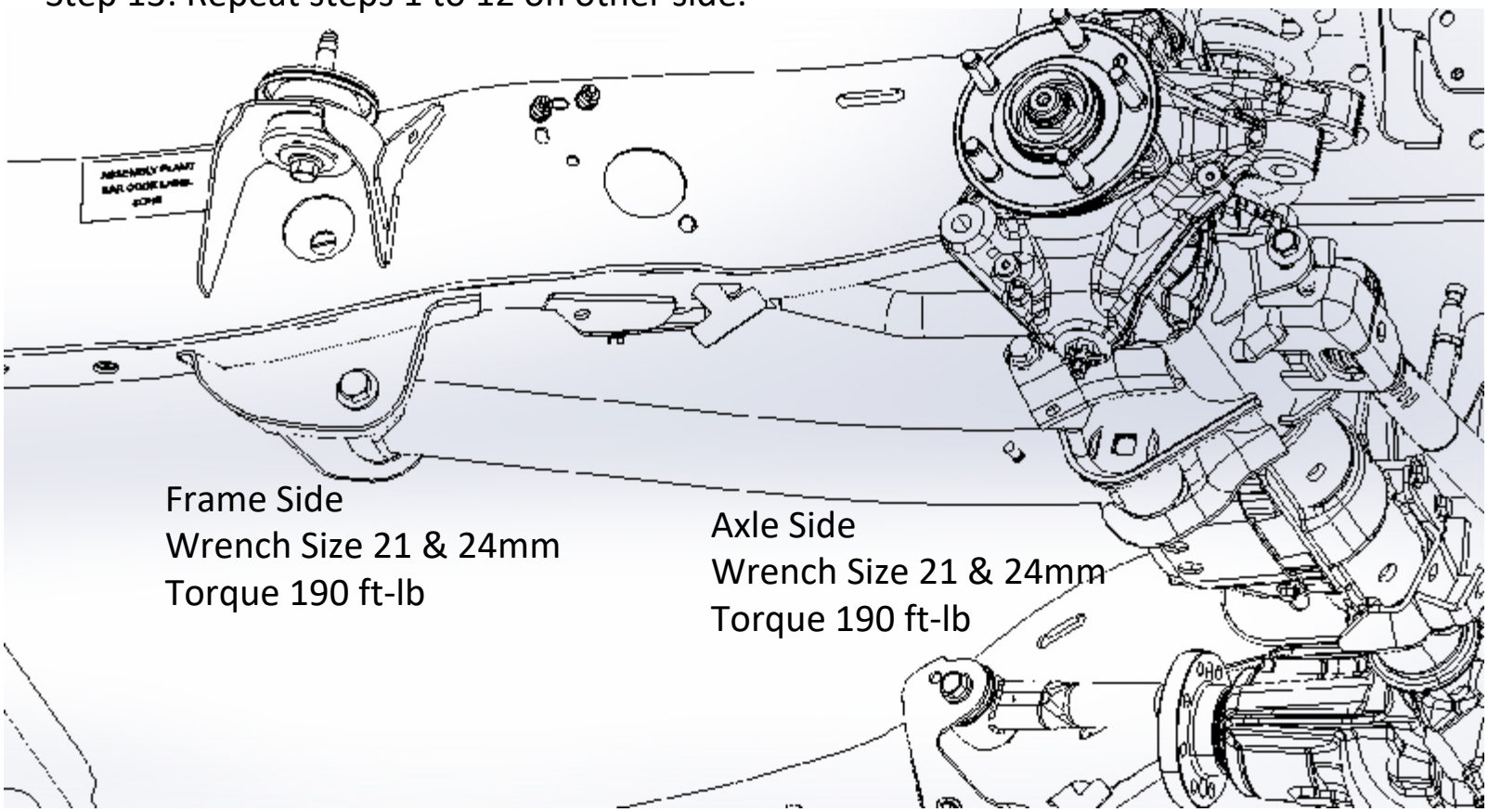

Refer to drawing below for minimum and maximum lengths.

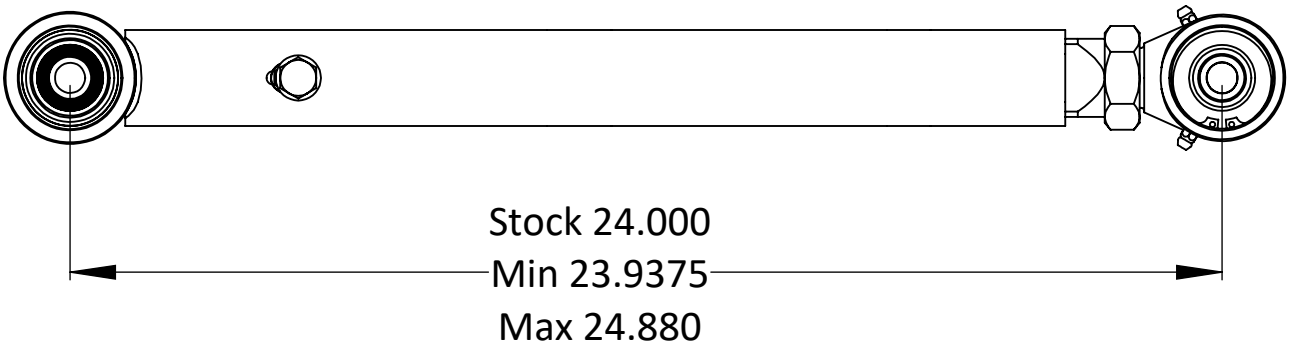

Clayton Off Road
COR-1809101
Jeep Wrangler Short Front Upper Control Arms (2018 & Up, JL)

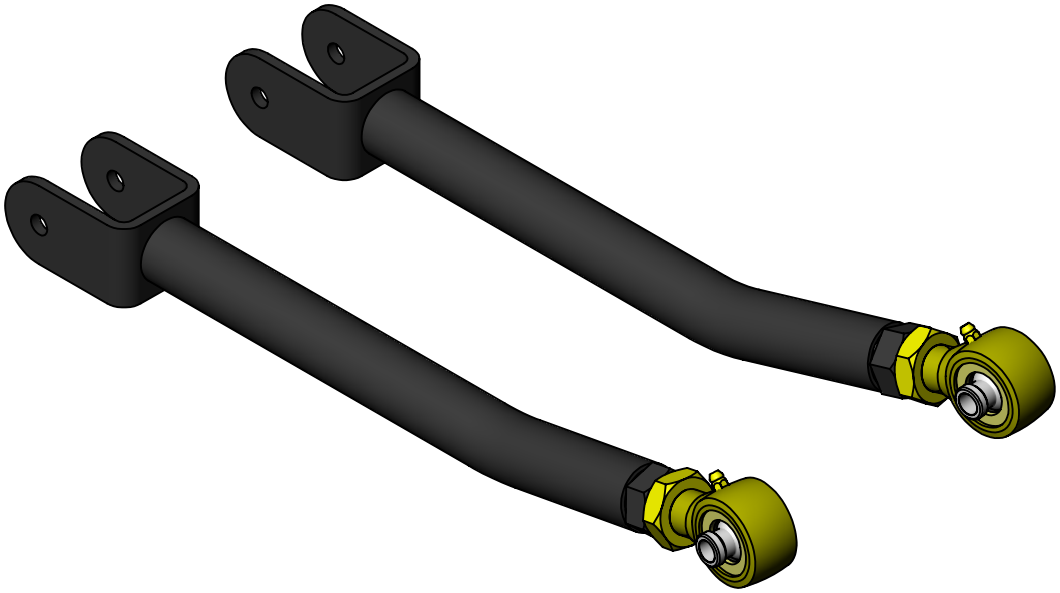

NOTES: This product may require general welding, fabrication and automotive mechanic skills. Welding should only be done by a competent welder. Clayton Off Road implies no guarantees or warranties and is not liable for improper installation. Some grinding and fitment may be required when installing this product. Every vehicle varies slightly and some fabrication may be required.
For more information please visit our website.

Refer to pictures below.

Step 1: Support axle from rotating, a floor or bottle jack works well.
Step 2: Remove old control arms.
Step 3: Set caster to 4.5 to 5.5 degrees by adjusting the height of the jack.
Step 4: Install arms at frame side, arm should bow away from frame.
Step 5: Adjust control arm to length so that bolts can easily be installed at axle end.
Step 6: Remove jack, and check caster.
Step 7: Torque all bolts to 80 ft-lb.
Step 8: Tighten jam nut using a 1-7/16" wrench.
Step 9: Make sure Johnny Joint at frame side is centered in bracket.

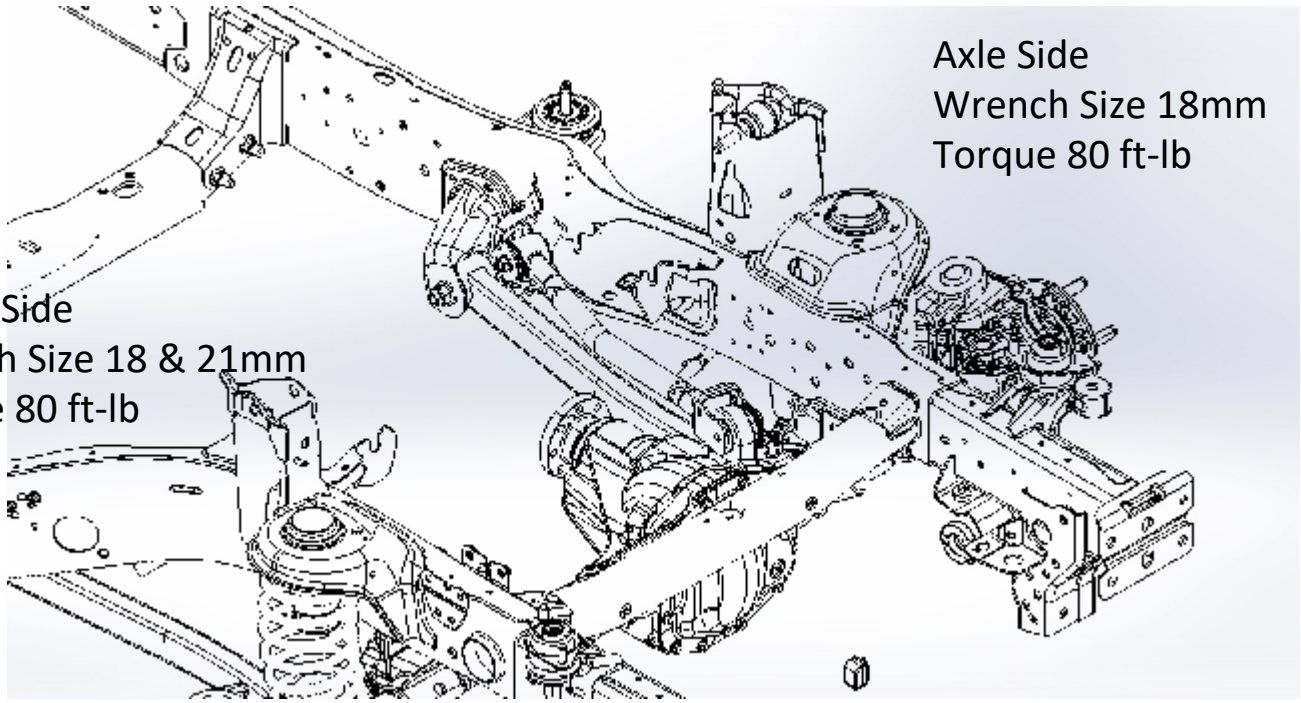

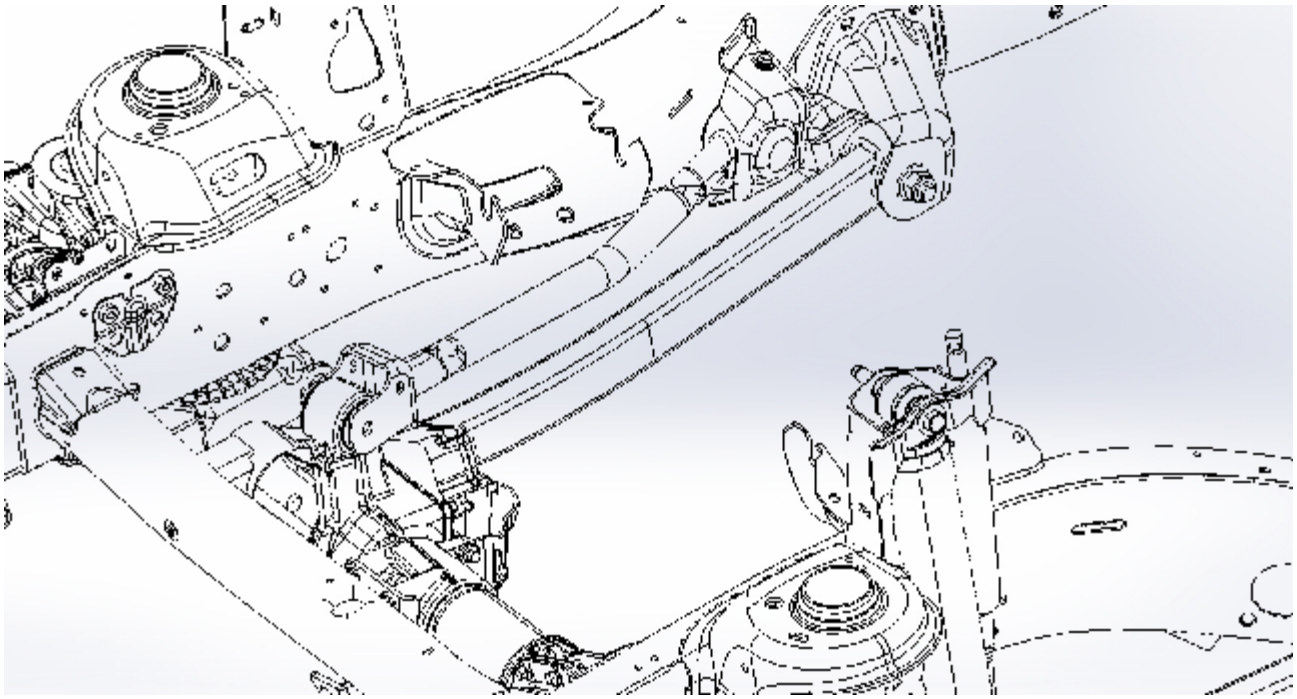

Refer to drawing below for minimum and maximum lengths.

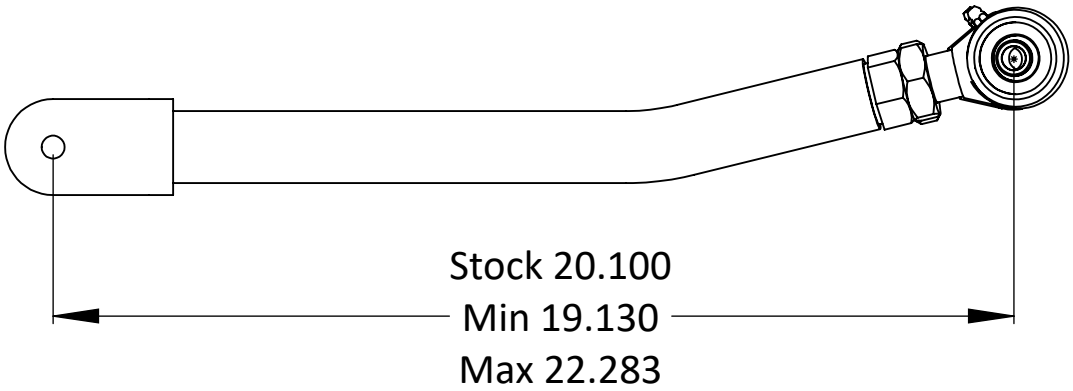

Clayton Off Road
COR-4509100
Jeep Wrangler Adjustable Front Track Bar (2018 & Up, JL)

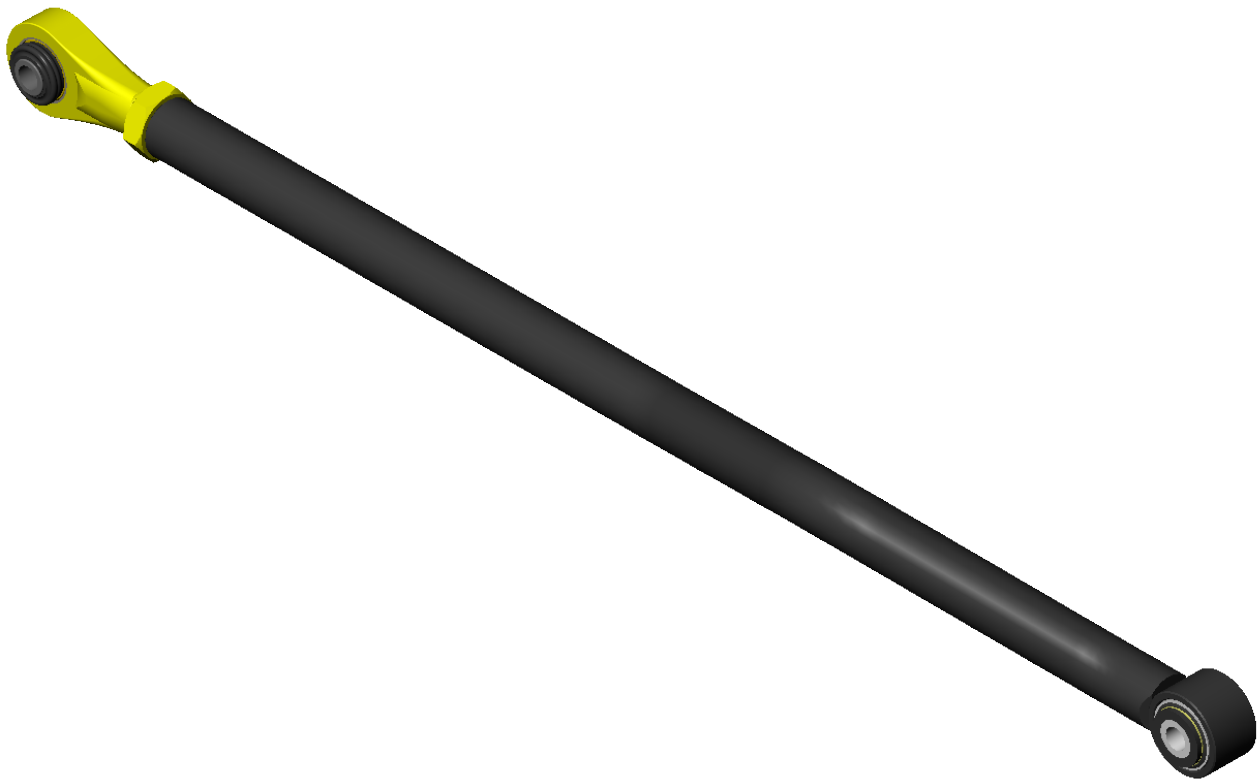

NOTES: This product may require general welding, fabrication and automotive mechanic skills. Welding should only be done by a competent welder. Clayton Off Road implies no guarantees or warranties and is not liable for improper installation. Some grinding and fitment may be required when installing this product. Every vehicle varies slightly and some fabrication may be required.
For more information please visit our website.

Refer to pictures below.

Step 1: Remove old track bar.
Step 2: Center frame on axle.
Step 3: Measure length from axle side mount to frame side mount.
Step 4: Adjust track bar to length and run jam nut up to track bar tube.
Step 5: Install new track bar with adjustment end on axle.
Step 6: Install track bar bolts and nuts.
Step 7: Torques both bolts to 110 ft-lb.
Step 8: Tighten jam nut using a 1-7/16" wrench.
Step 9: Make sure Johnny Joint at frame side is centered in bracket.

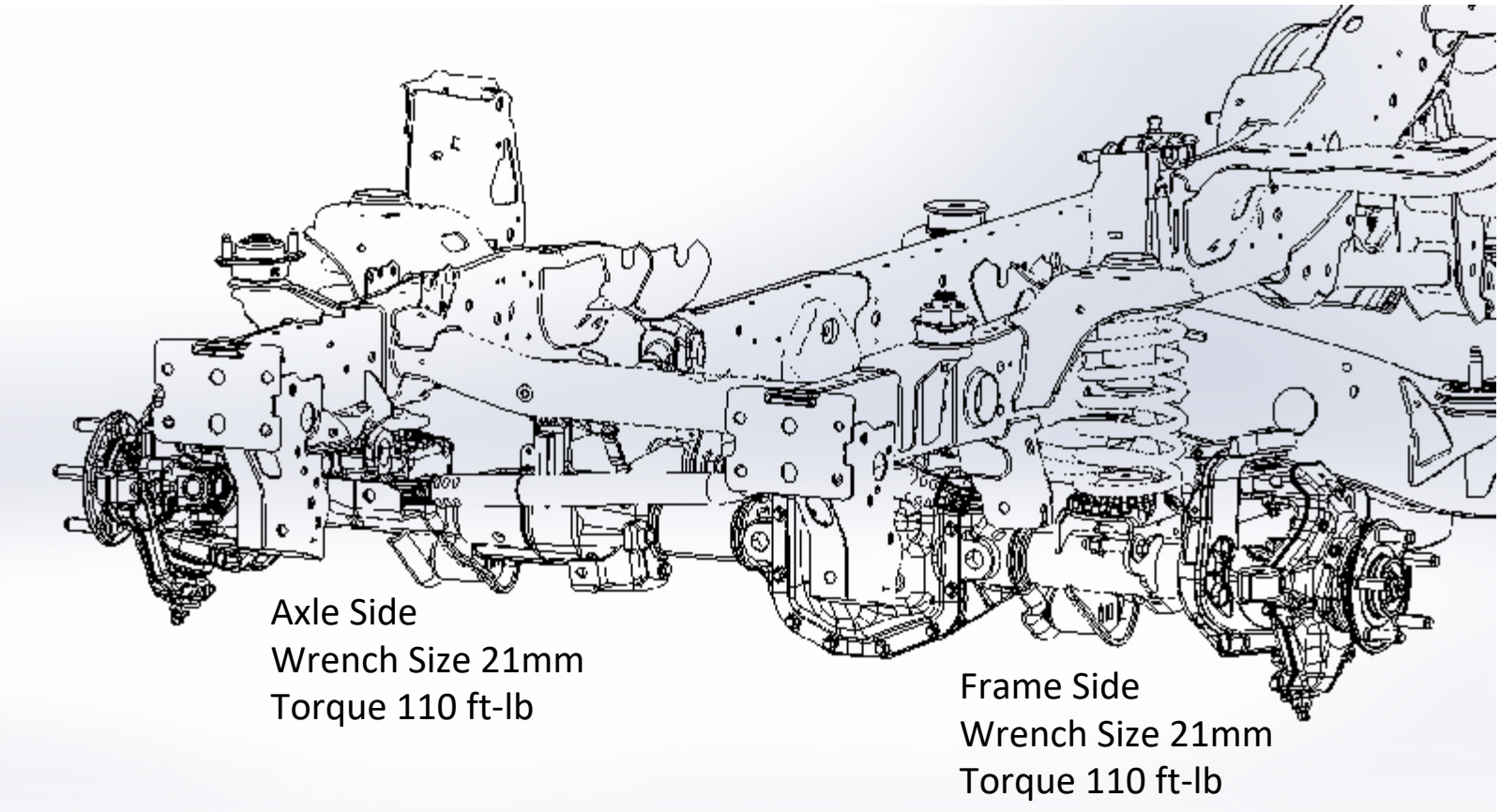

Refer to drawing below for minimum and maximum lengths.

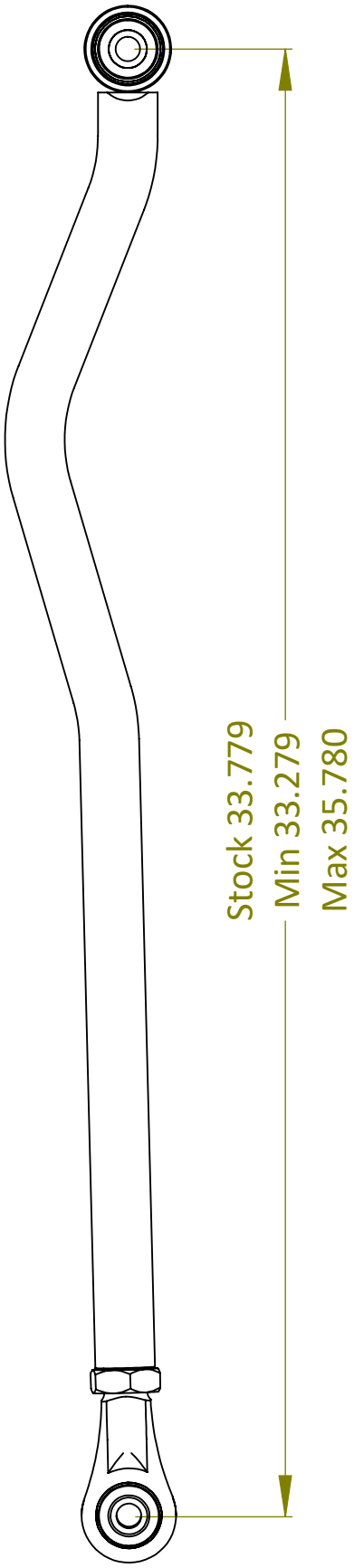

Clayton Off Road
COR-1408100
Jeep Wrangler Front Bump Stops (2007 & Up, JK/JL)

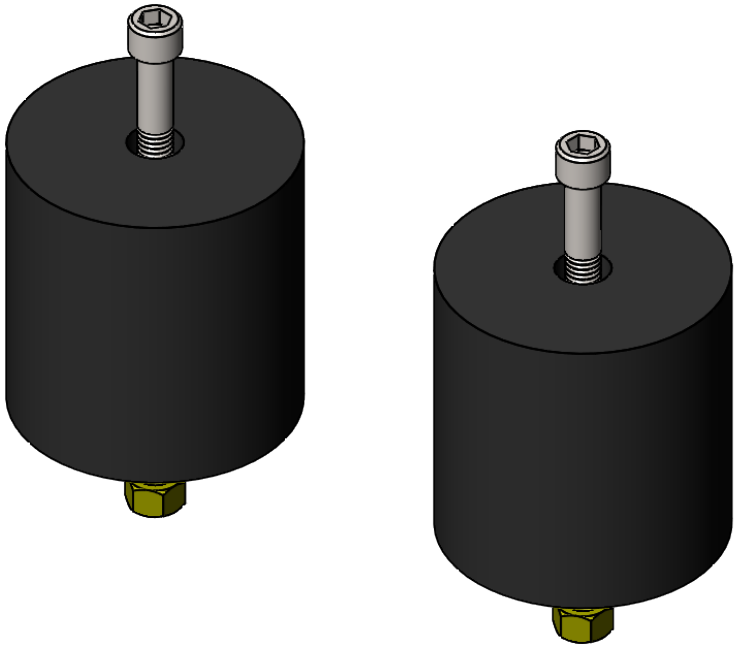

NOTES: This product may require general welding, fabrication and automotive mechanic skills. Welding should only be done by a competent welder. Clayton Off Road implies no guarantees or warranties and is not liable for improper installation. Some grinding and fitment may be required when installing this product. Every vehicle varies slightly and some fabrication may be required.
For more information please visit our website.

Refer to picture below.

Step 1: Remove spring.
Step 2: Center bump stop on lower coil bucket.
Step 3: Mark hole location on lower coil bucket.
Step 4: Drill 13/32" hole in lower coil bucket.
Step 5: Insert bump stop into spring and install spring.
Step 6: Install nut and tighten bolt.

Clayton Off Road
COR-5109100
Jeep Wrangler Adjustable Front Sway Bar End Links (2018 & Up, JL)

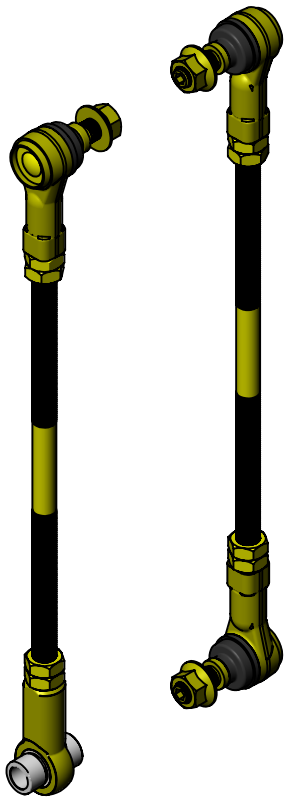

NOTES: This product may require general welding, fabrication and automotive mechanic skills. Welding should only be done by a competent welder. Clayton Off Road implies no guarantees or warranties and is not liable for improper installation. Some grinding and fitment may be required when installing this product. Every vehicle varies slightly and some fabrication may be required.
For more information please visit our website.

Refer to pictures below.

Step 1: Remove old sway bar end links.
Step 2: Make sure vehicle is at ride height.
Step 3: Refer to the spread sheet below to determine how much to cut from each end of threaded rod.
Step 4: Cut threaded rod.
Step 5: Deburr end of threaded rod.
Step 6: Install two jam nuts on each end of rod.
Step 7: It maybe necessary to lock the 2 jam nuts against each other to thread rod end on.
Step 8: The rod end with no stud in it goes on the passenger side axle, Use a aluminum spacer on each side of this rod end.
Step 9: Install sway bar links with the studs facing in.
Step 10: Make sure all rod ends are centered.
Step 11: Torque all nuts, bolts and jam nuts to 60 ft-lb.
Step 12: Cycle the suspension through its full travel, check for binding and adjust rod length if needed.
Step 13: Do not exceed maximum length.
Step 14: Make sure to keep at least 3/4" of thread engagement with rod end.

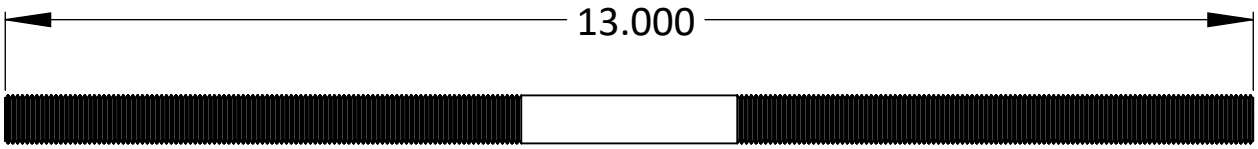

Lift Height >	Stock	2.5" Lift		3.5" Lift		4.5" Lift	
Suspension Component		Center Length	Cut Each End	Center Length	Cut Each End	Center Length	Cut Each End
JK Front Sway Bar Link	5.250	9.250	2.938	10.250	2.438	11.250	1.938
JK Rear Sway Bar Link	8.750	11.750	1.656	12.750	1.188	13.750	0.688
JL Front Sway Bar Link	5.063	9.063	3.000	10.063	2.531		
JL Rear Sway Bar Link	8.750	11.750	1.656	12.750	1.188		
JT Front Sway Bar Link	5.063	8.063	3.500	9.063	3.031		
JT Rear Sway Bar Link	10.625	13.625	0.719	14.625	0.250		

Refer to drawing below for minimum and maximum lengths.

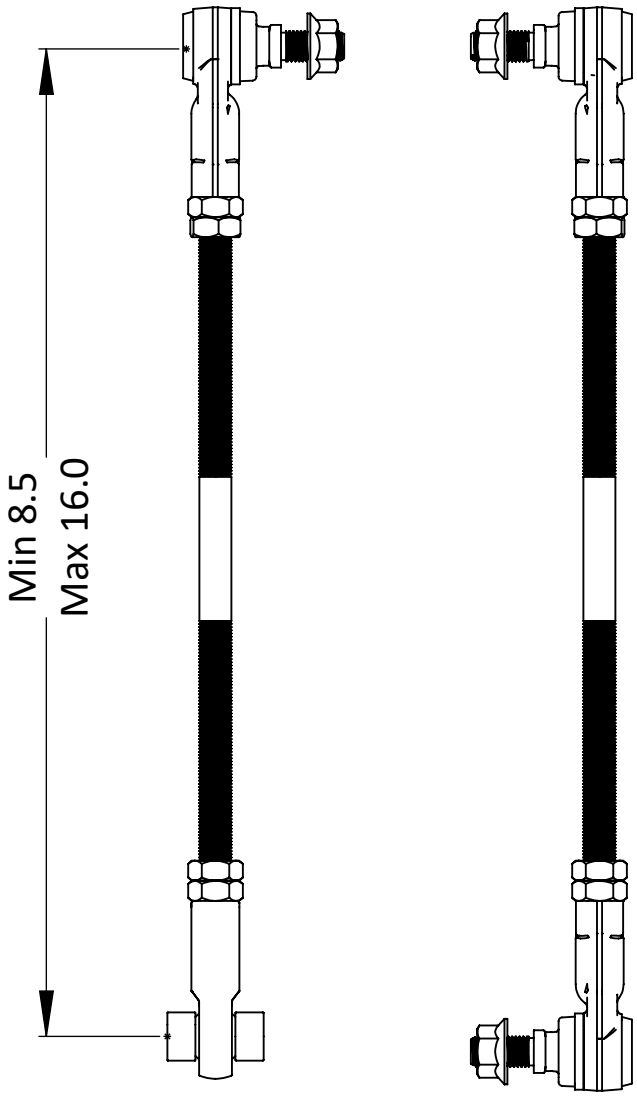

Clayton Off Road
COR-1809102
Jeep Wrangler Short Rear Lower Control Arms (2018 & Up, JK/JL)

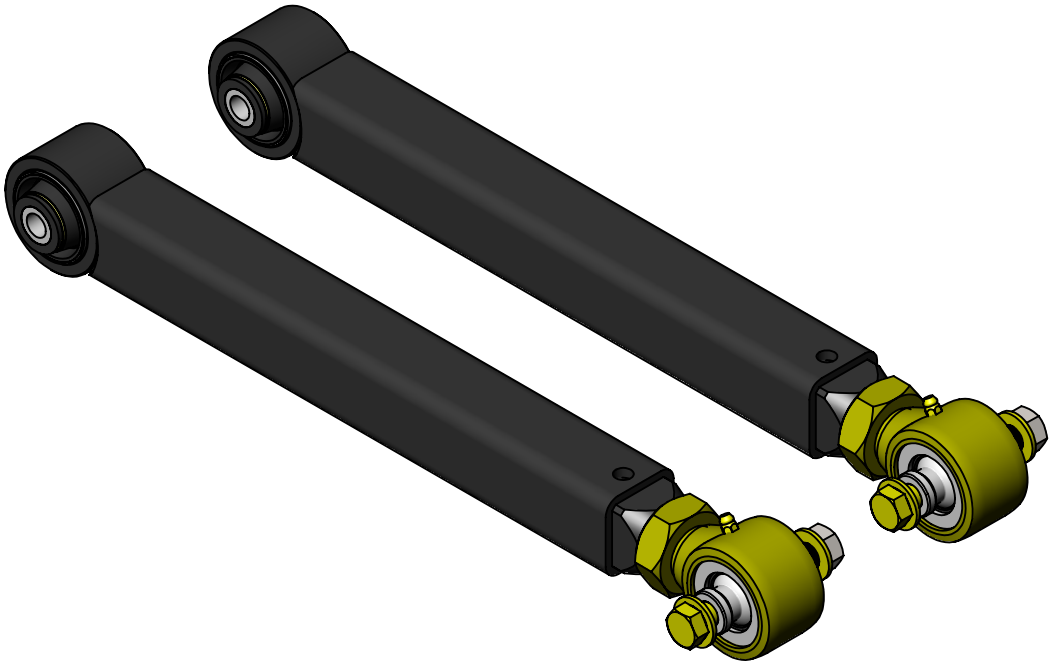

NOTES: This product may require general welding, fabrication and automotive mechanic skills. Welding should only be done by a competent welder. Clayton Off Road implies no guarantees or warranties and is not liable for improper installation. Some grinding and fitment may be required when installing this product. Every vehicle varies slightly and some fabrication may be required.
For more information please visit our website.

Refer to pictures below.

Step 1: Remove old control arm on one side.
Step 2: Position axle.
Step 3: Measure length from axle side mount to frame side mount.
Step 4: Adjust control arm to length and run jam nut up to control arm tube insert.
Step 5: Install new control arm with adjustment end on frame.
Step 6: Install control arm bolts and nuts.
Step 7: Torques both bolts to 90 ft-lb.
Step 8: Tighten jam nut using a 46mm or 1-13/16" wrench.
Step 9: Make sure Johnny Joint at frame side is centered in bracket.
Step 10: Repeat steps 1 to 9 on other side.

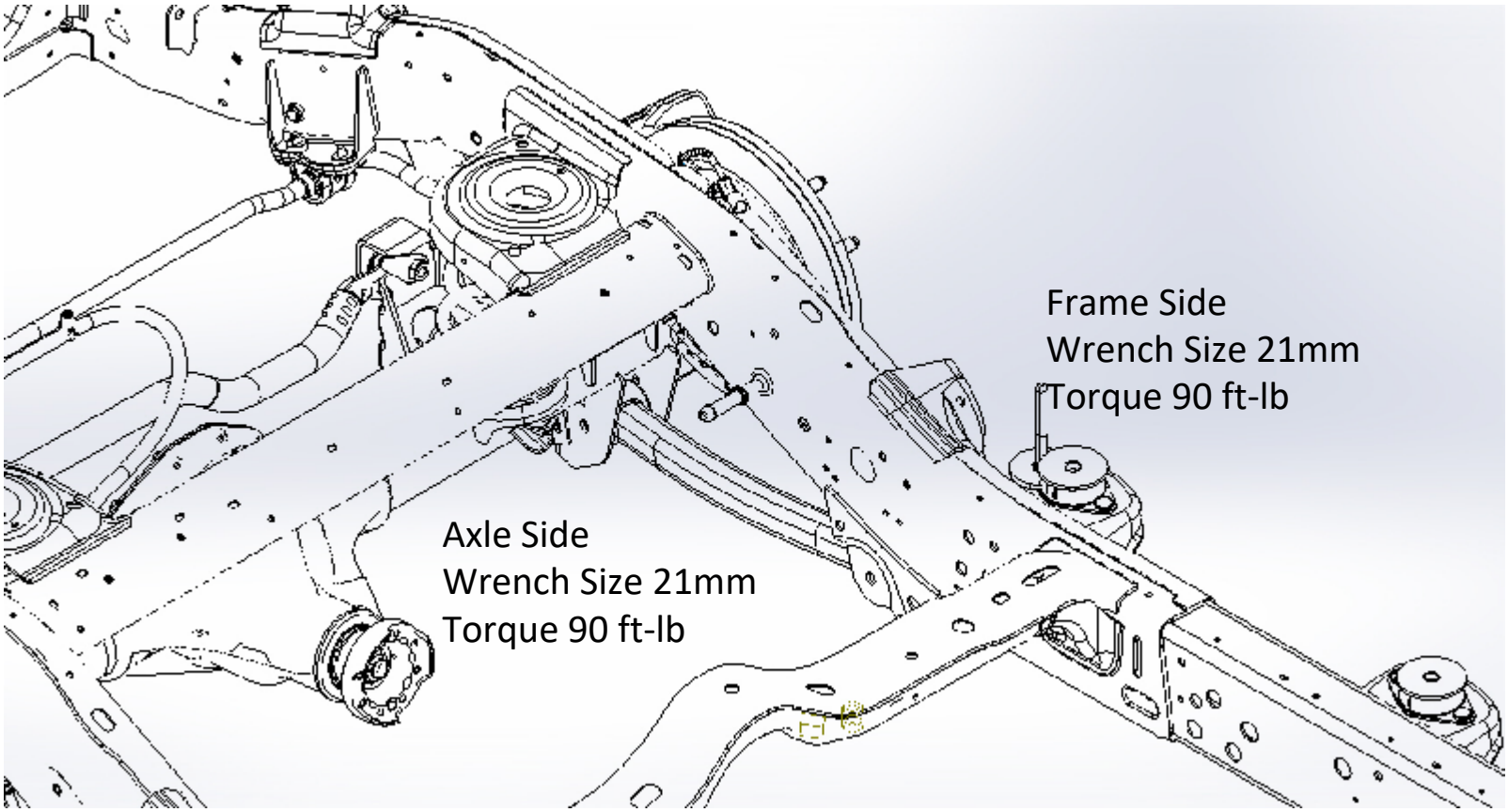

Refer to drawing below for minimum and maximum lengths.

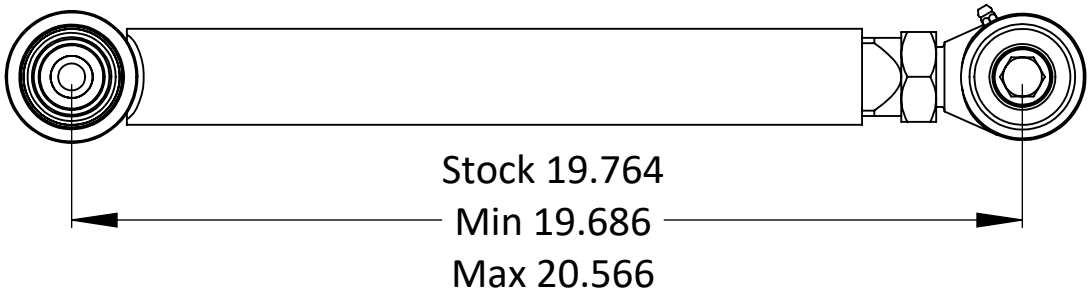

Clayton Off Road
COR-1809103
Jeep Wrangler Short Rear Upper Control Arms (2007 & Up, JK/JL)

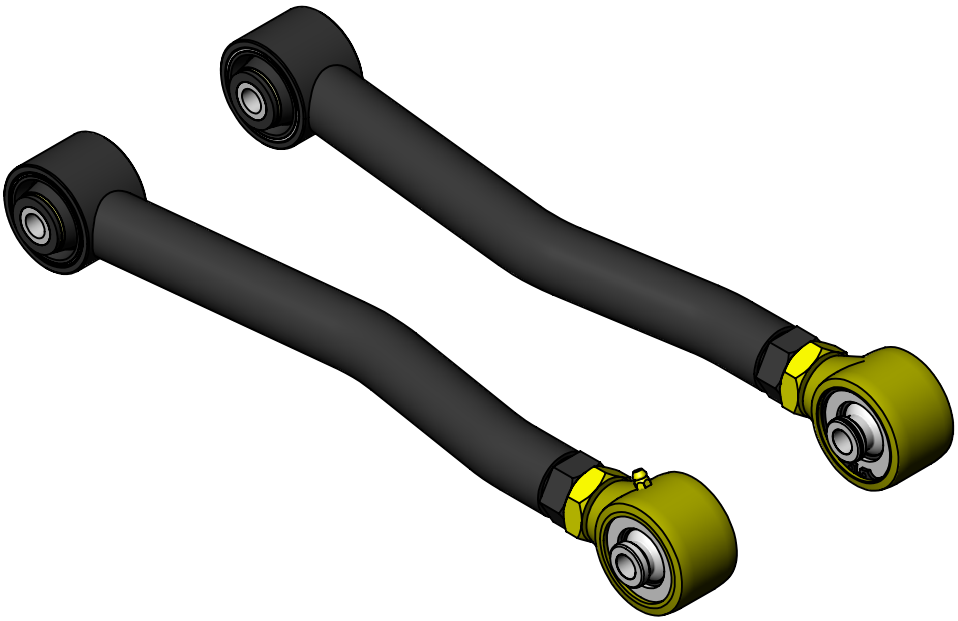

NOTES: This product may require general welding, fabrication and automotive mechanic skills. Welding should only be done by a competent welder. Clayton Off Road implies no guarantees or warranties and is not liable for improper installation. Some grinding and fitment may be required when installing this product. Every vehicle varies slightly and some fabrication may be required.
For more information please visit our website.

Refer to pictures below.

Step 1: Support axle from rotating, a floor or bottle jack works well.
Step 2: Remove old control arms.
Step 3: Set pinion angle desired pinion angle by adjusting the height of the jack.
Step 4: Install arms at frame side, arm should bow towards frame.
Step 5: Adjust control arm to length so that bolts can easily be installed at axle end.
Step 6: Remove jack, and pinion angle.
Step 7: Torque all bolts to 95 ft-lb at axle end and 120 ft-lb at frame end.
Step 8: Tighten jam nut using a 1-7/16" wrench.
Step 9: Make sure Johnny Joint at axle side is centered in bracket.

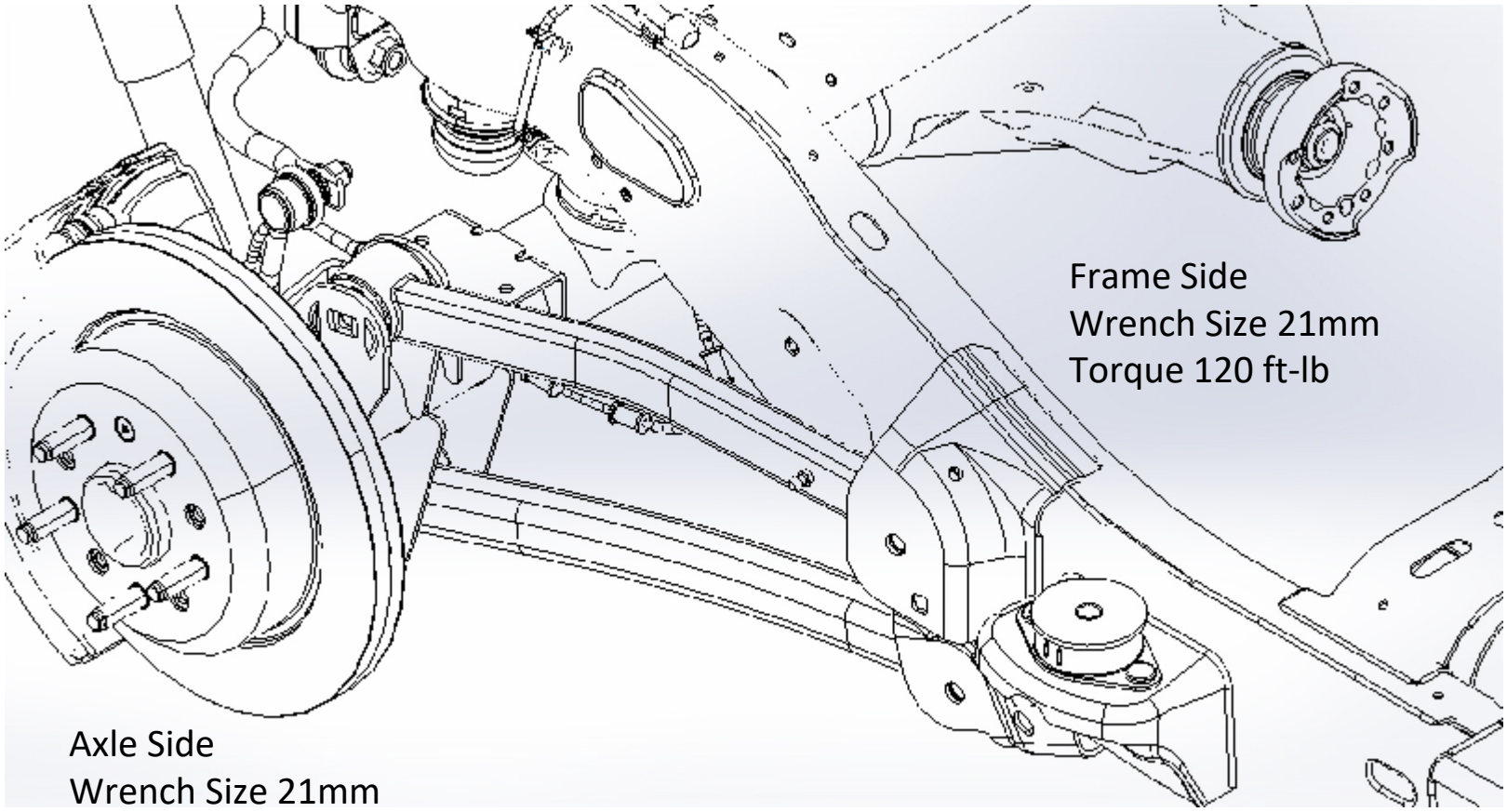

Axle Side
Wrench Size 21mm
Torque 95 ft-lb

Refer to drawing below for minimum and maximum lengths.

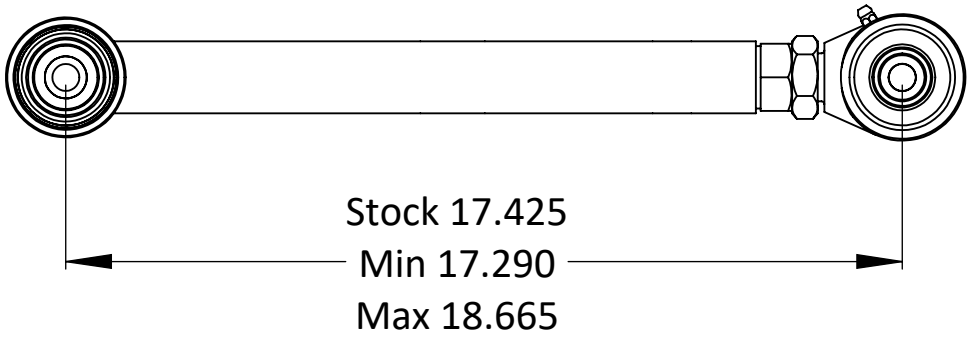

Clayton Off Road
COR-4509110
Jeep Wrangler Adjustable Rear Track Bar (2018 & Up, JL)

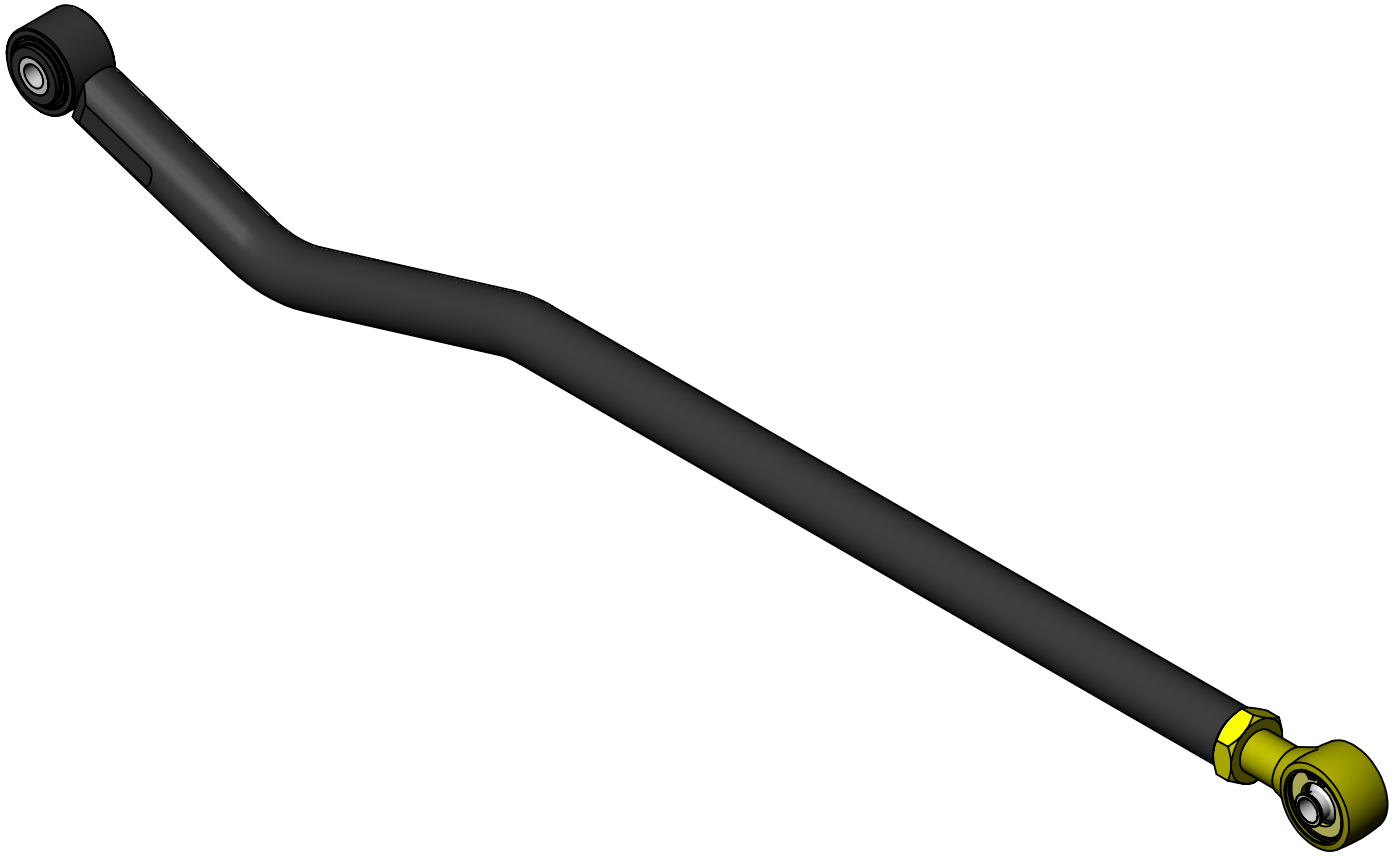

NOTES: This product may require general welding, fabrication and automotive mechanic skills. Welding should only be done by a competent welder. Clayton Off Road implies no guarantees or warranties and is not liable for improper installation. Some grinding and fitment may be required when installing this product. Every vehicle varies slightly and some fabrication may be required.
For more information please visit our website.

Refer to pictures below.

Step 1: Remove old track bar.
Step 2: Center frame on axle.
Step 3: Measure length from axle side mount to frame side mount.
Step 4: Adjust track bar to length and run jam nut up to track bar tube.
Step 5: Install new track bar with adjustment end on axle.
Step 6: Install track bar bolts and nuts.
Step 7: Torques both bolts to 90 ft-lb.
Step 8: Tighten jam nut using a 1-7/16" wrench.
Step 9: Make sure Johnny Joint at frame side is centered in bracket.

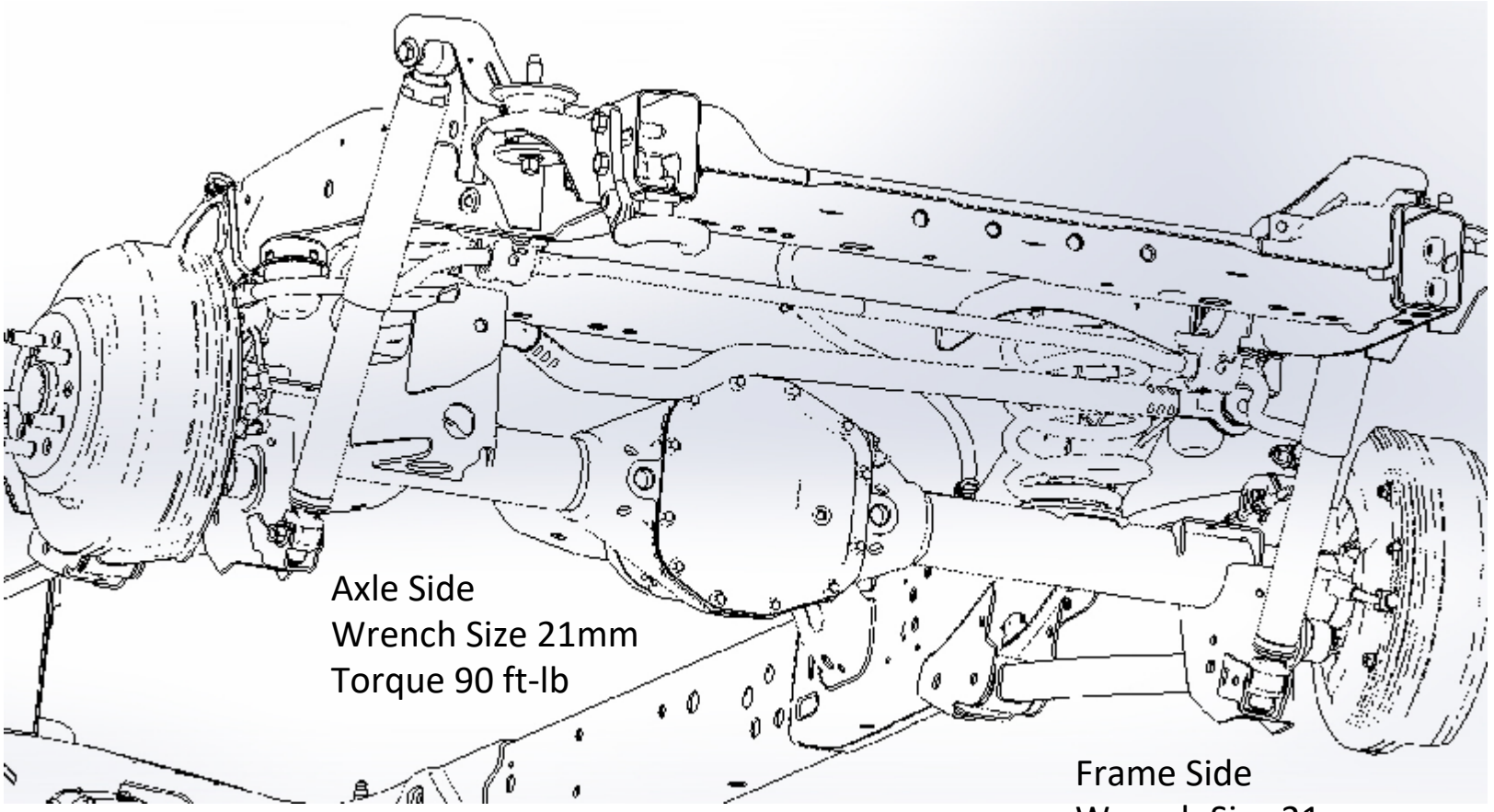

Refer to drawing below for minimum and maximum lengths.

Clayton Off Road
COR-1409200
Jeep Wrangler Rear Bump Stops (2018 & Up, JL)

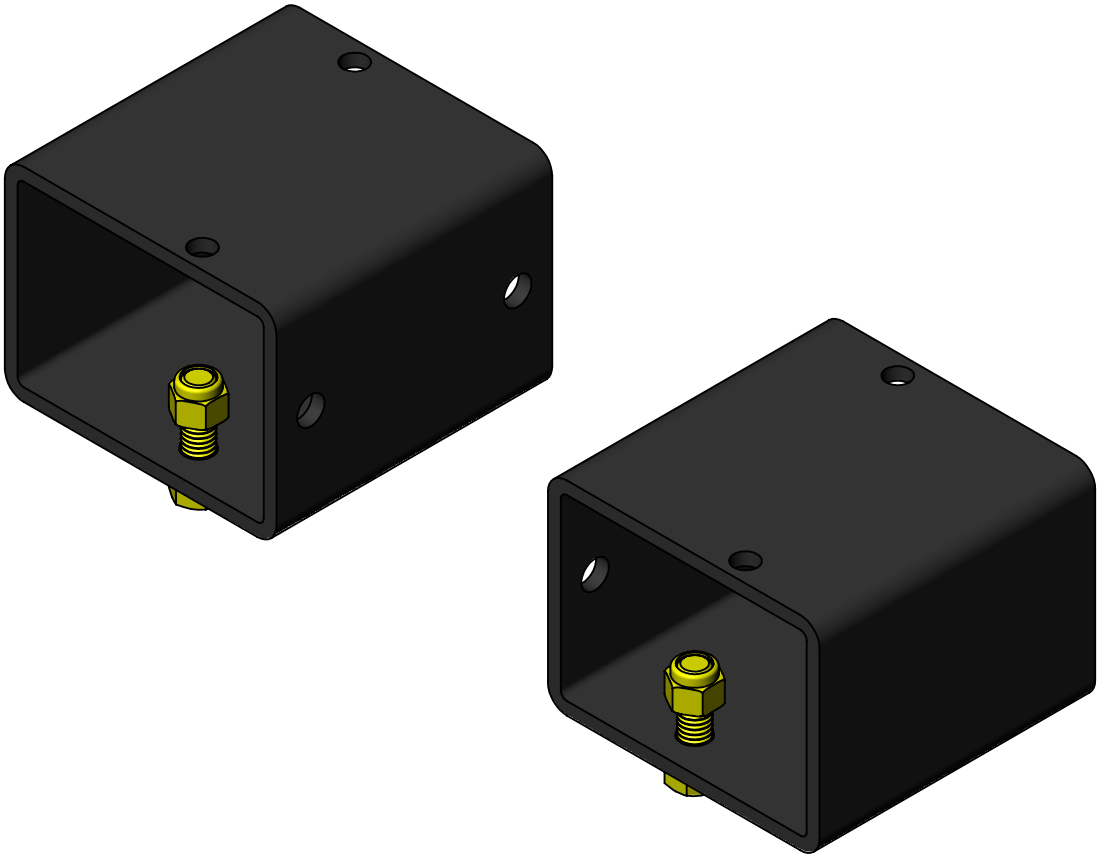

NOTES: This product may require general welding, fabrication and automotive mechanic skills. Welding should only be done by a competent welder. Clayton Off Road implies no guarantees or warranties and is not liable for improper installation. Some grinding and fitment may be required when installing this product. Every vehicle varies slightly and some fabrication may be required.
For more information please visit our website.

Refer to picture below.

Step 1: For a 3" bump stop locate the tube on axle mount with holes offset to the inside. For a 4" bump stop stand the tube on end. Bump stops will be offset to the driver side.
Step 2: Insert bolts from the bottom, thread nuts on.
Step 3: Torque bolts to 30 ft-lb.
Step 4: Repeat steps 1 to 3 on other side.

Part number COR-1410201 Jeep Gladiator Rear Bump Stop Extensions are available to fine tune your bump stop height.

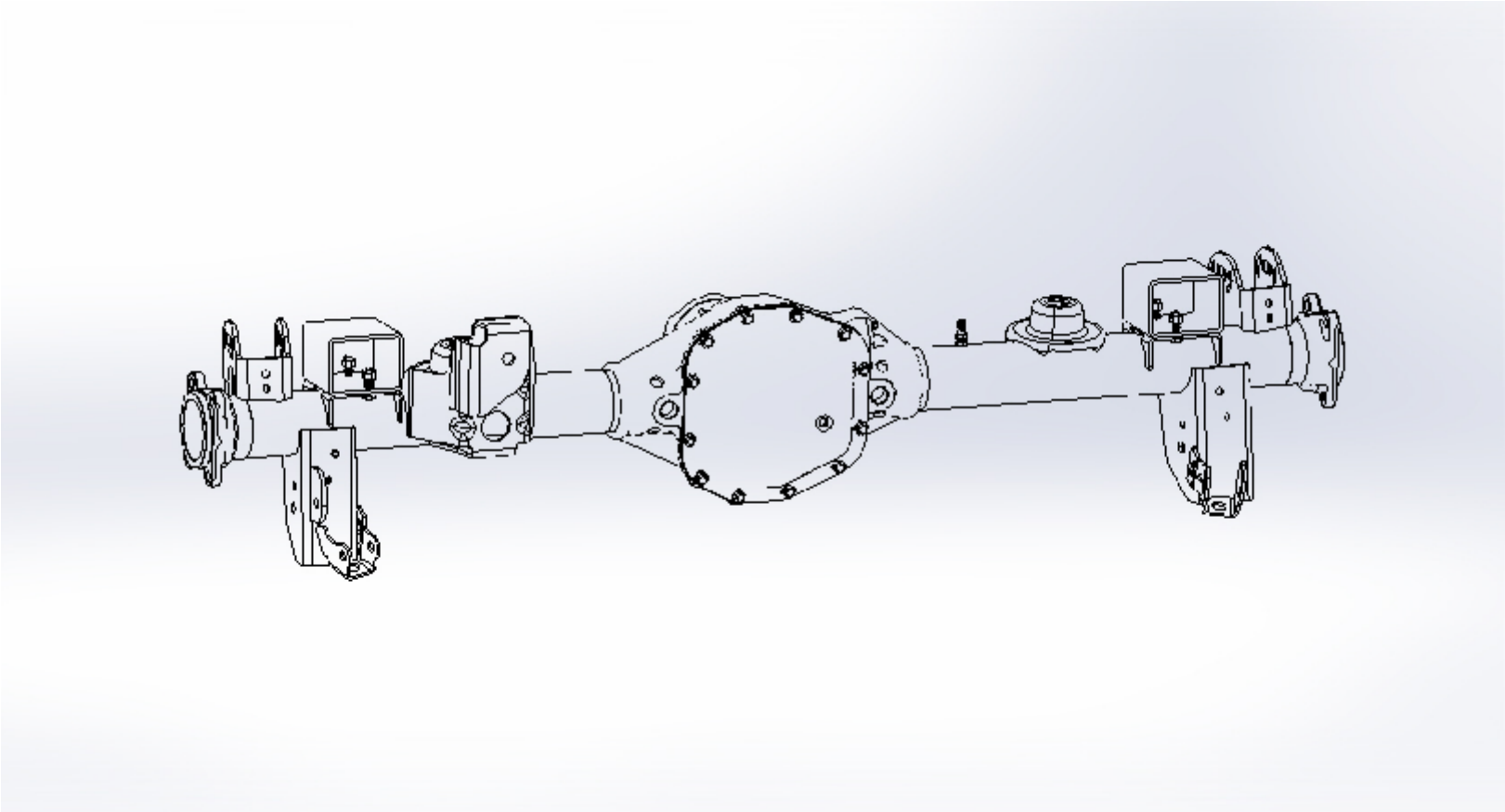

Clayton Off Road
COR-5109100
Jeep Wrangler Adjustable Rear Sway Bar End Links (2007 & Up, JK/JL)

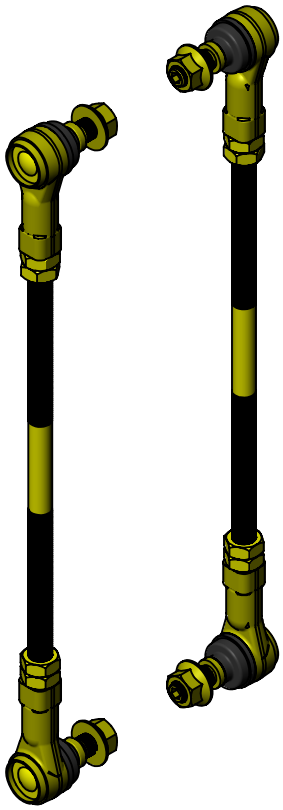

NOTES: This product may require general welding, fabrication and automotive mechanic skills. Welding should only be done by a competent welder. Clayton Off Road implies no guarantees or warranties and is not liable for improper installation. Some grinding and fitment may be required when installing this product. Every vehicle varies slightly and some fabrication may be required.
For more information please visit our website.

Refer to pictures below.

Step 1: Remove old sway bar end links.
Step 2: Make sure vehicle is at ride height.
Step 3: Refer to the spread sheet below to determine how much to cut from each end of threaded rod.
Step 4: Cut threaded rod.
Step 5: Deburr end of threaded rod.
Step 6: Install two jam nuts on each end of rod.
Step 7: It maybe necessary to lock the 2 jam nuts against each other to thread rod end on.
Step 8: Install sway bar links with the studs facing in.
Step 9: Make sure all rod ends are centered.
Step 10: Torque all nuts, bolts and jam nuts to 60 ft-lb.
Step 11: Cycle the suspension through its full travel, check for binding and adjust rod length if needed.
Step 12: Do not exceed maximum length.
Step 13: Make sure to keep at least 3/4" of thread engagement with rod end.

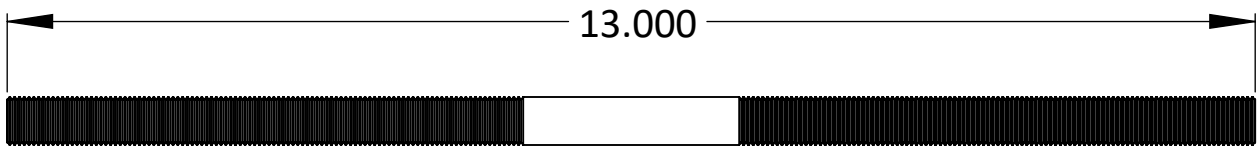

Lift Height >	Stock	2.5" Lift		3.5" Lift		4.5" Lift	
Suspension Component		Center Length	Cut Each End	Center Length	Cut Each End	Center Length	Cut Each End
JK Front Sway Bar Link	5.250	9.250	2.938	10.250	2.438	11.250	1.938
JK Rear Sway Bar Link	8.750	11.750	1.656	12.750	1.188	13.750	0.688
JL Front Sway Bar Link	5.063	9.063	3.000	10.063	2.531		
JL Rear Sway Bar Link	8.750	11.750	1.656	12.750	1.188		
JT Front Sway Bar Link	5.063	8.063	3.500	9.063	3.031		
JT Rear Sway Bar Link	10.625	13.625	0.719	14.625	0.250		

Refer to drawing below for minimum and maximum lengths.

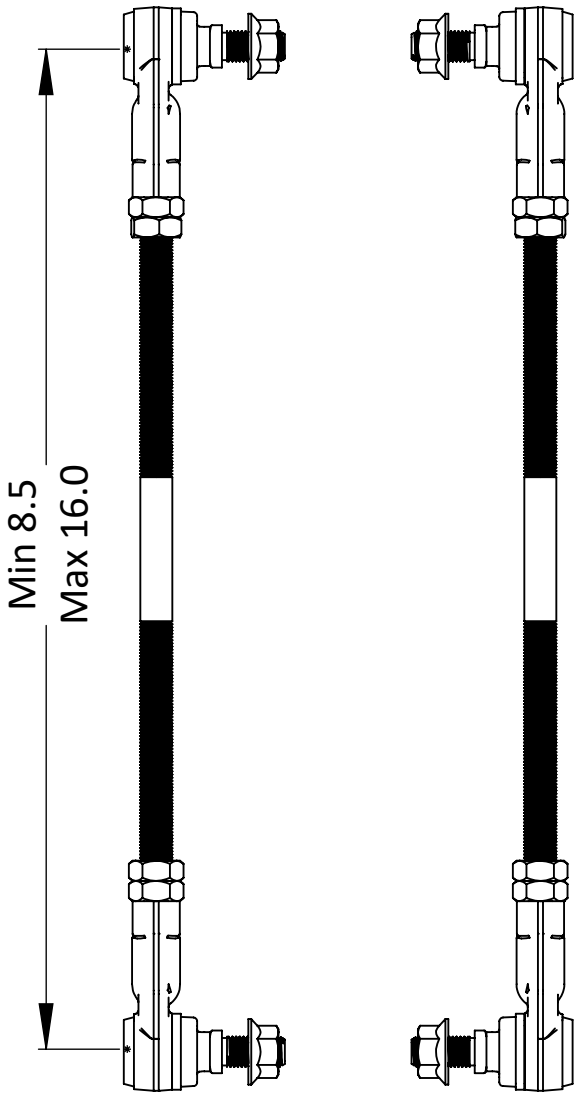

View other performance suspension parts made by Clayton Off Road on our website.