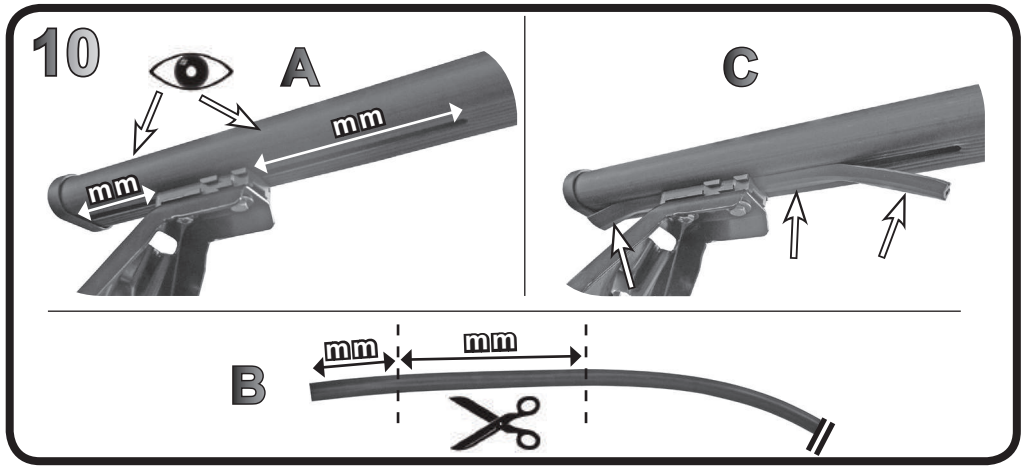

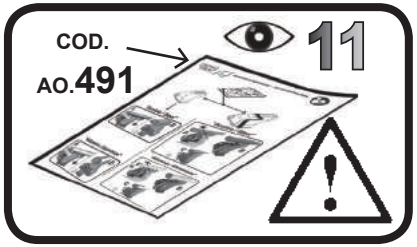

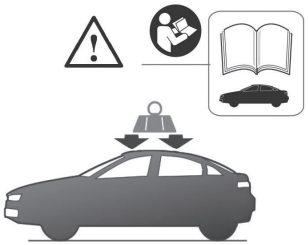

68.099

FITTING INSTRUCTION
"Steel"

= 15 min.

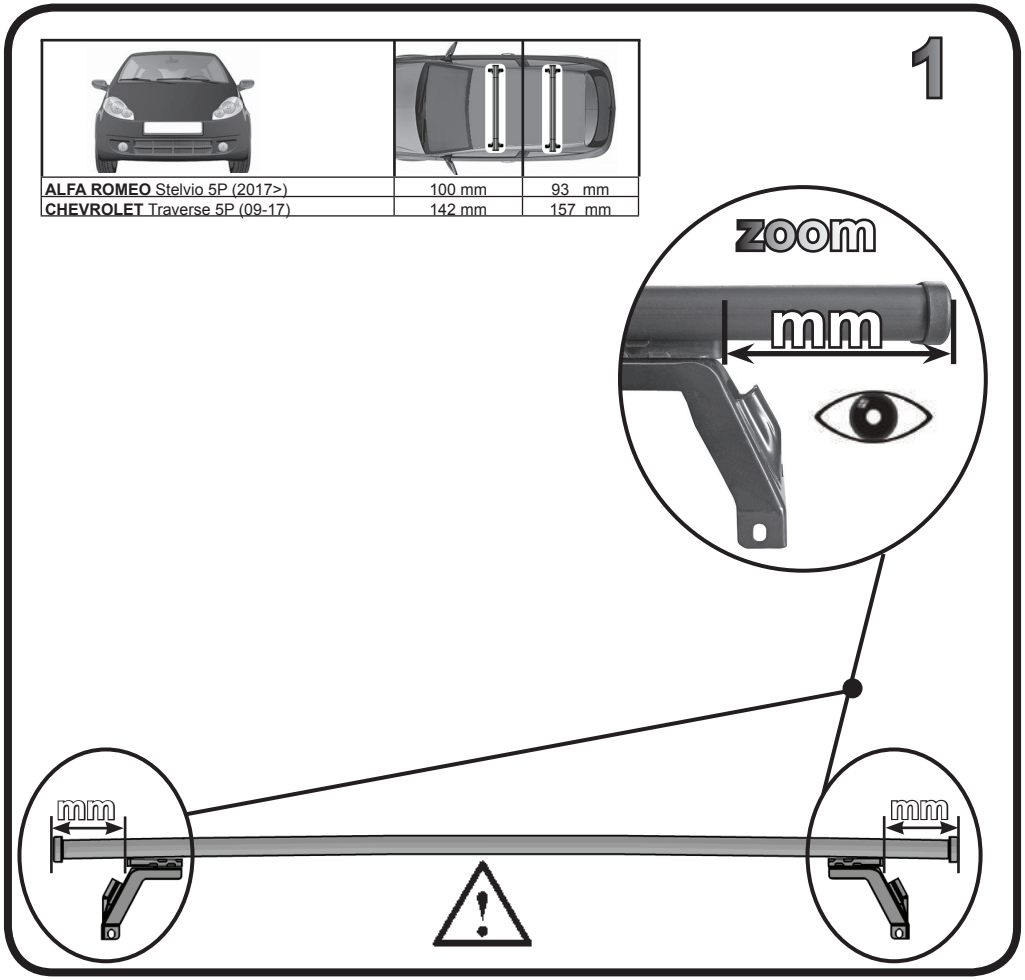

ALFA ROMEO Stelvio 5P (2017>)	100 mm	93 mm
CHEVROLET Traverse 5P (09-17)	142 mm	157 mm

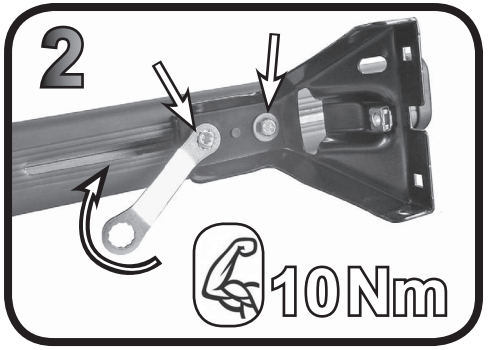

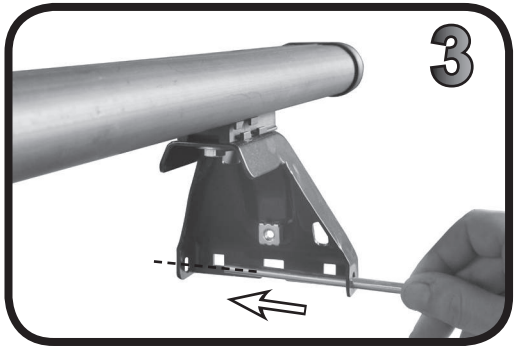

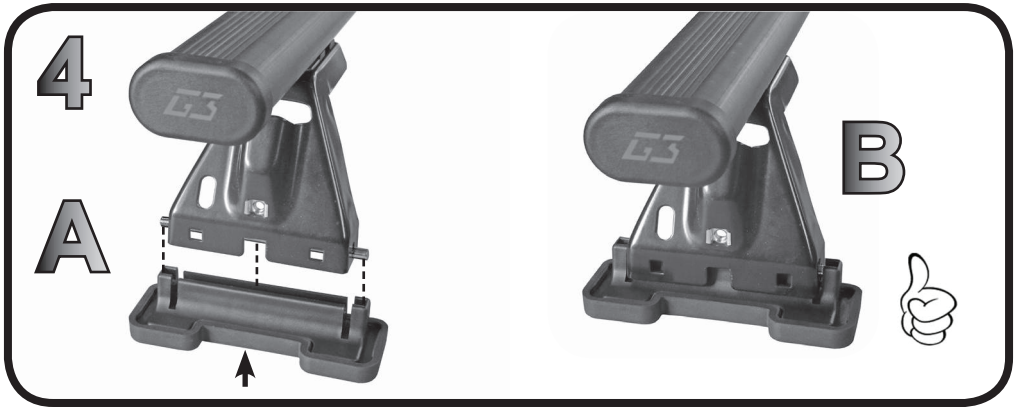

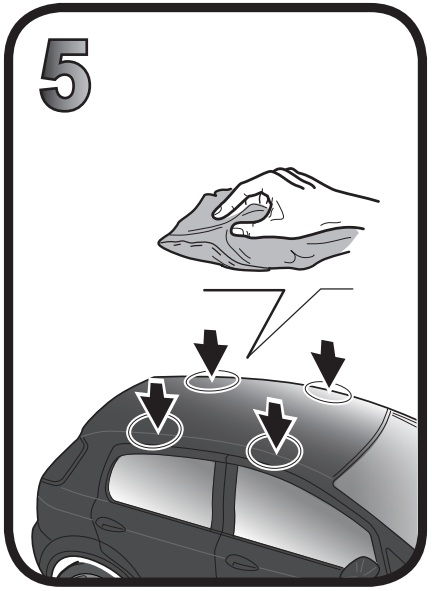

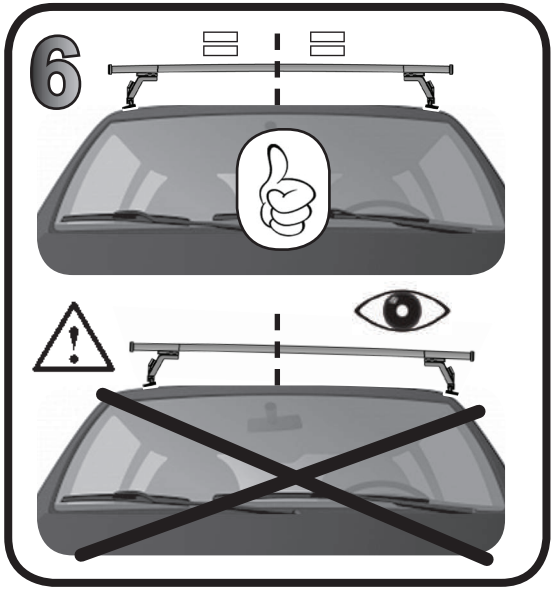

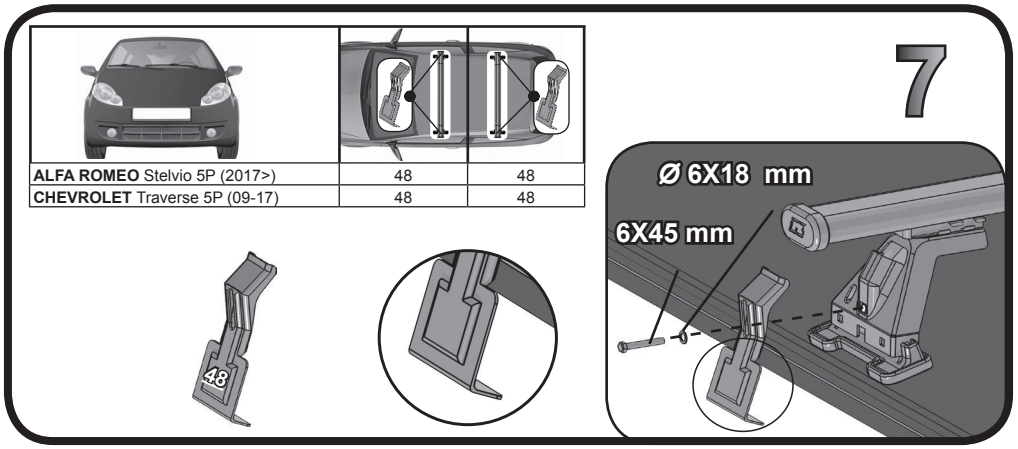

ALFA ROMEO Stelvio 5P (2017>)	48	48
CHEVROLET Traverse 5P (09-17)	48	48

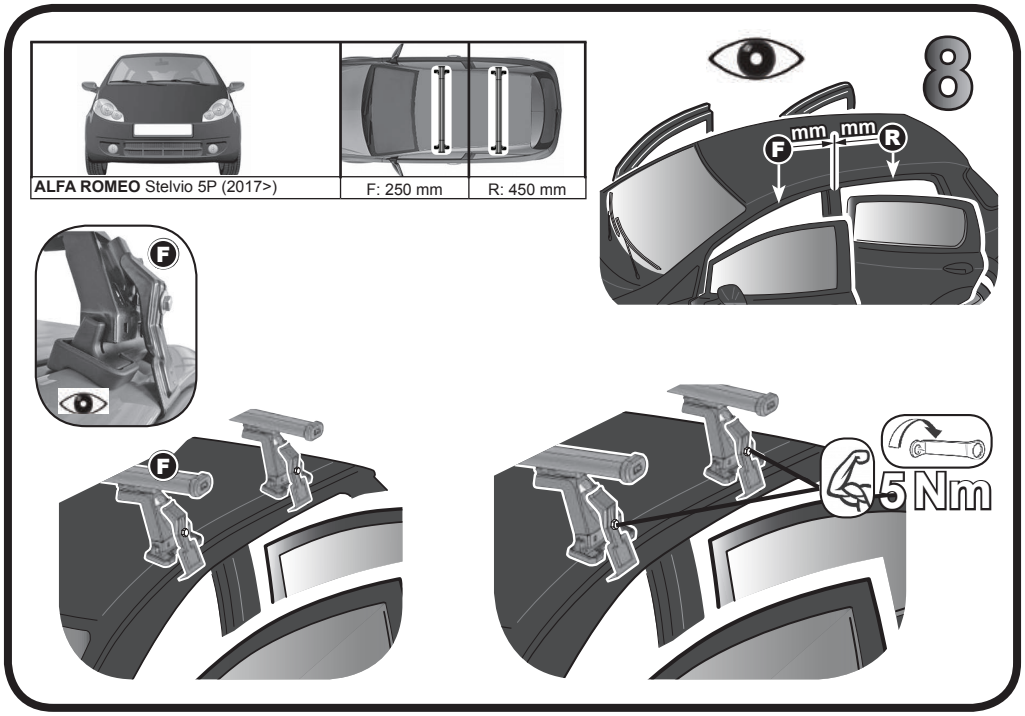

ALFA ROMEO Stelvio 5P (2017>)	F: 250 mm	R: 450 mm

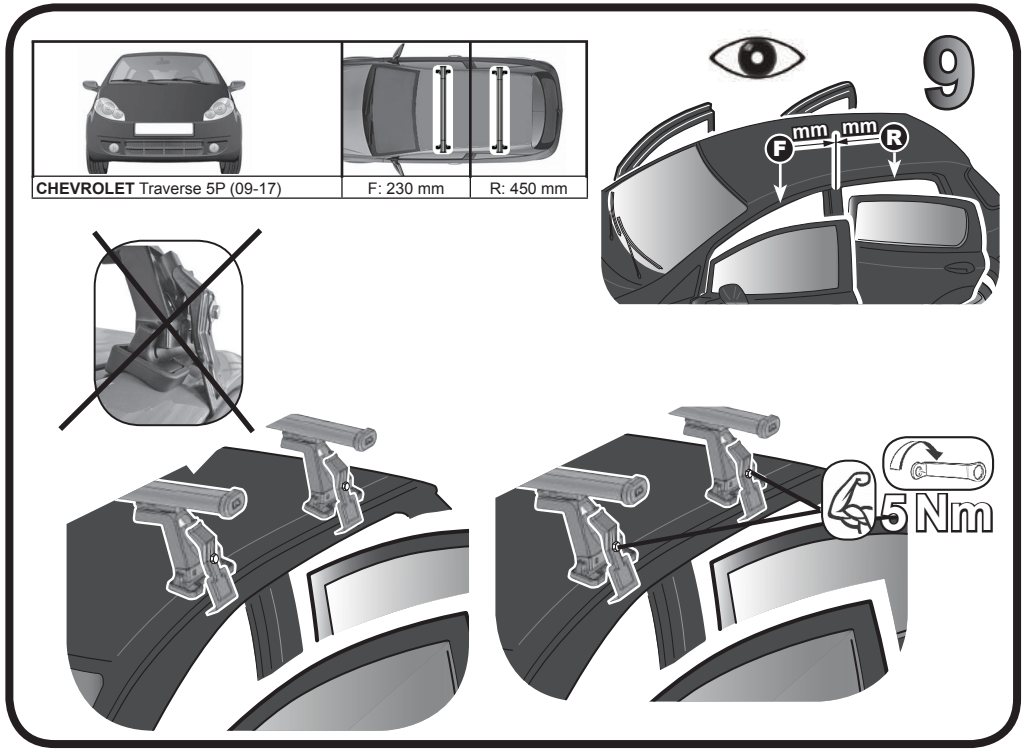

CHEVROLET Traverse 5P (09-17)	F: 230 mm	R: 450 mm

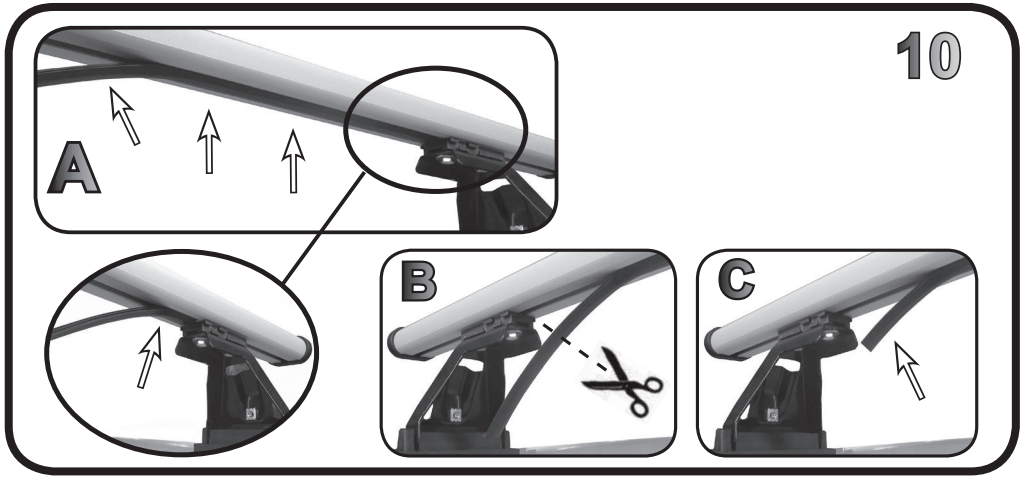

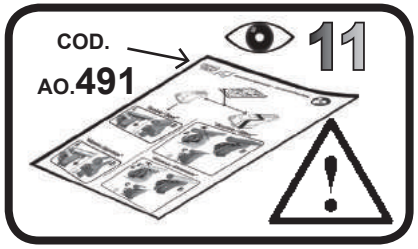

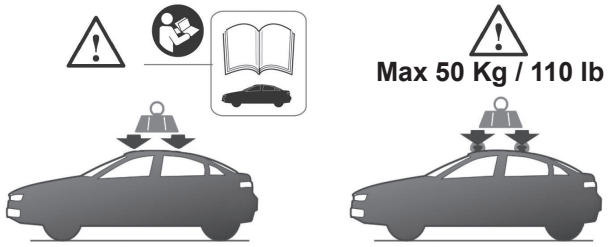

68.099 G3

FITTING INSTRUCTION
"Aluminium"

= 15 min.

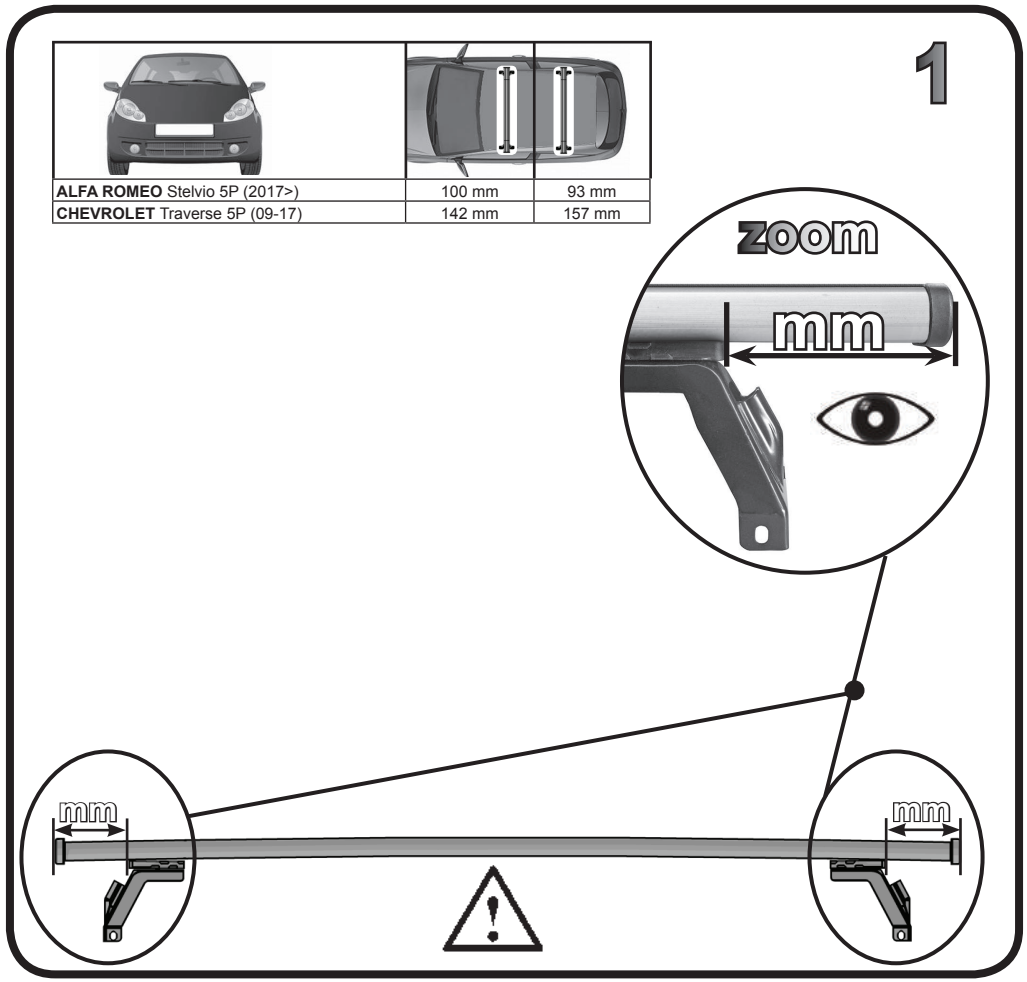

ALFA ROMEO Stelvio 5P (2017>)	100 mm	93 mm
CHEVROLET Traverse 5P (09-17)	142 mm	157 mm

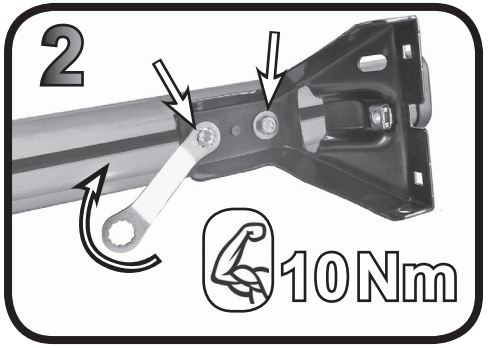

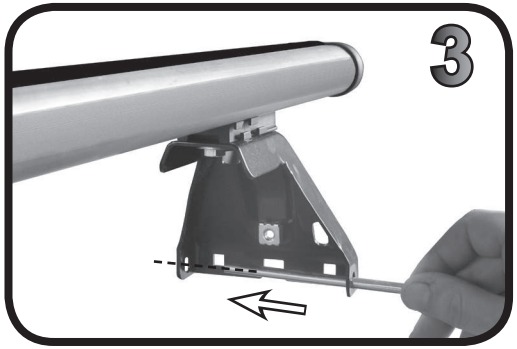

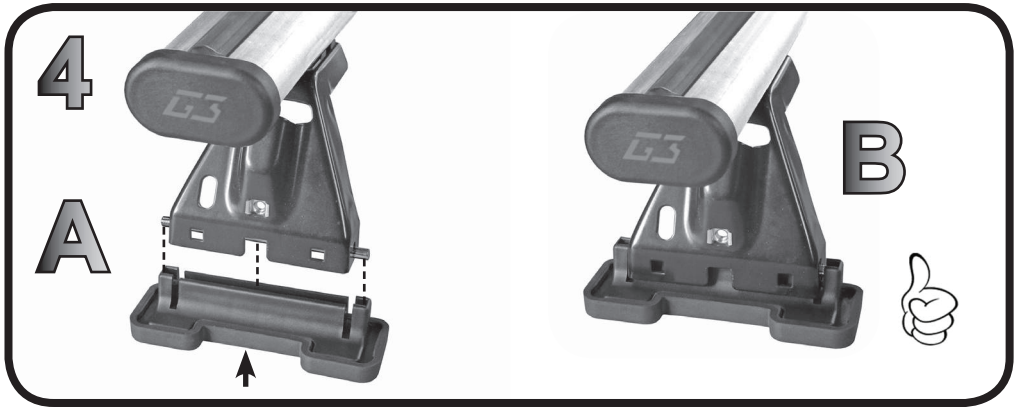

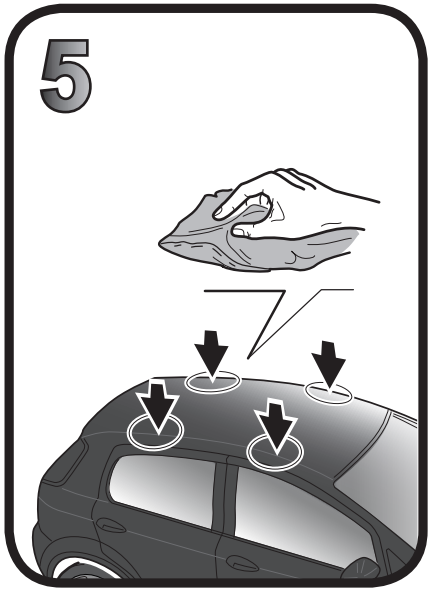

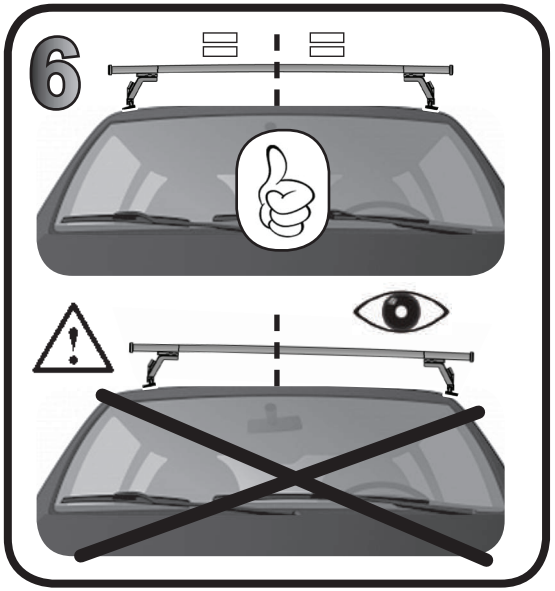

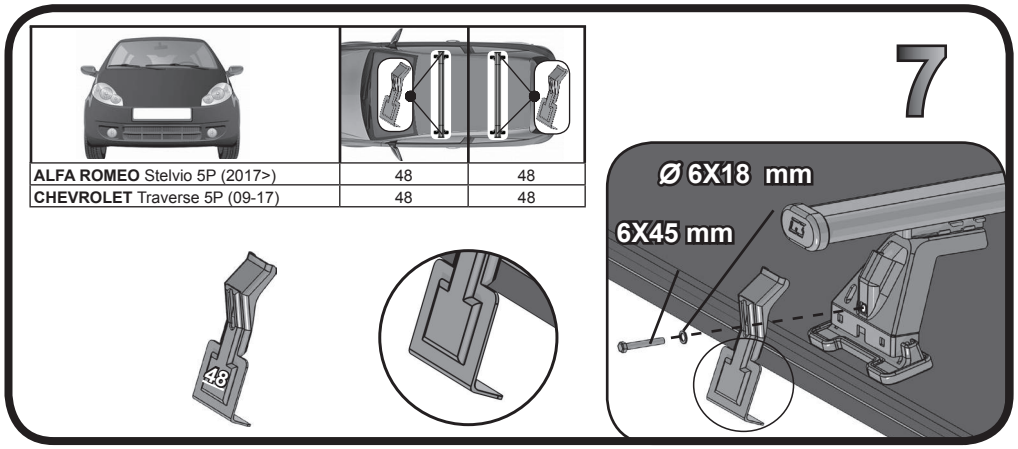

ALFA ROMEO Stelvio 5P (2017>)	48	48
CHEVROLET Traverse 5P (09-17)	48	48

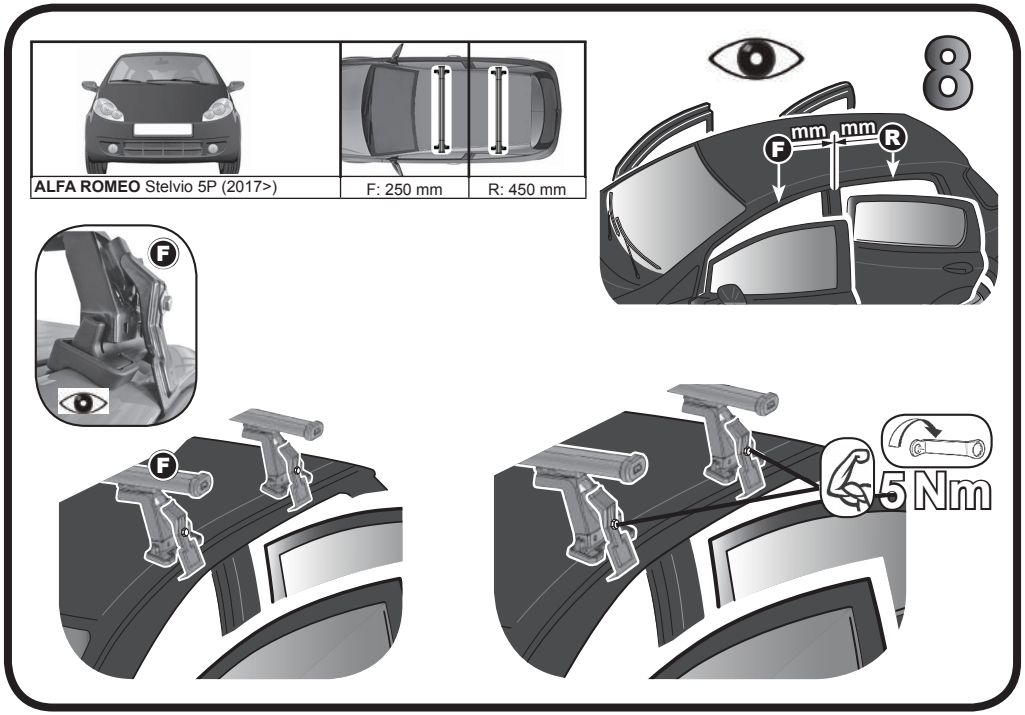

ALFA ROMEO Stelvio 5P (2017>)	F: 250 mm	R: 450 mm

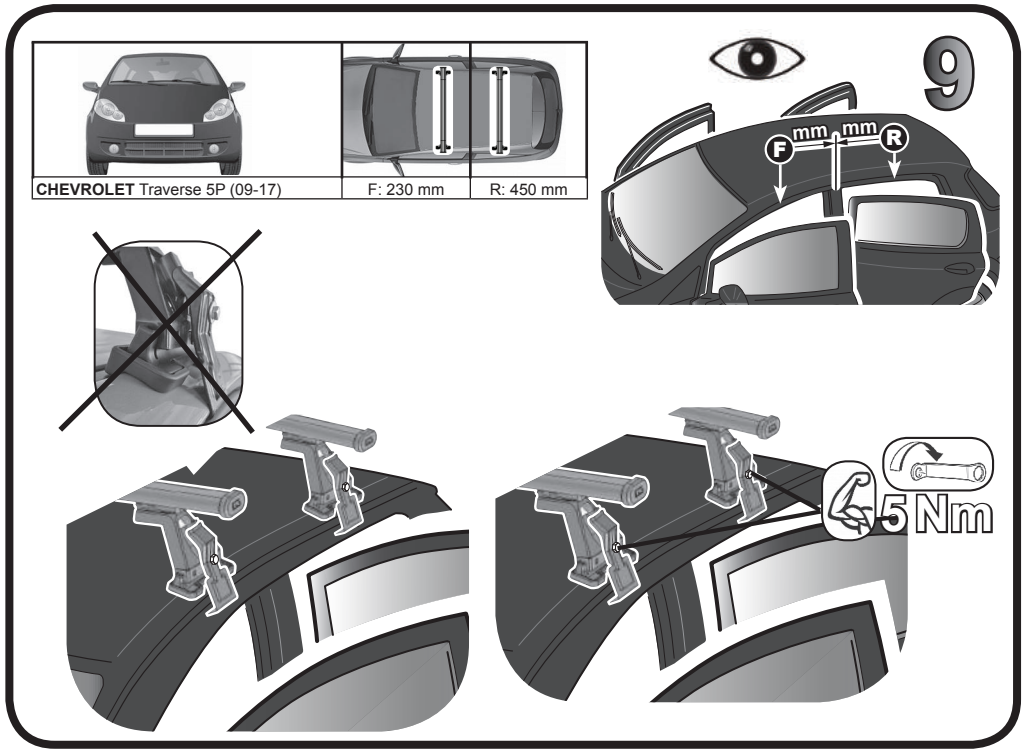

CHEVROLET Traverse 5P (09-17)	F: 230 mm	R: 450 mm

Learn more about roof racks on our website.