#52004

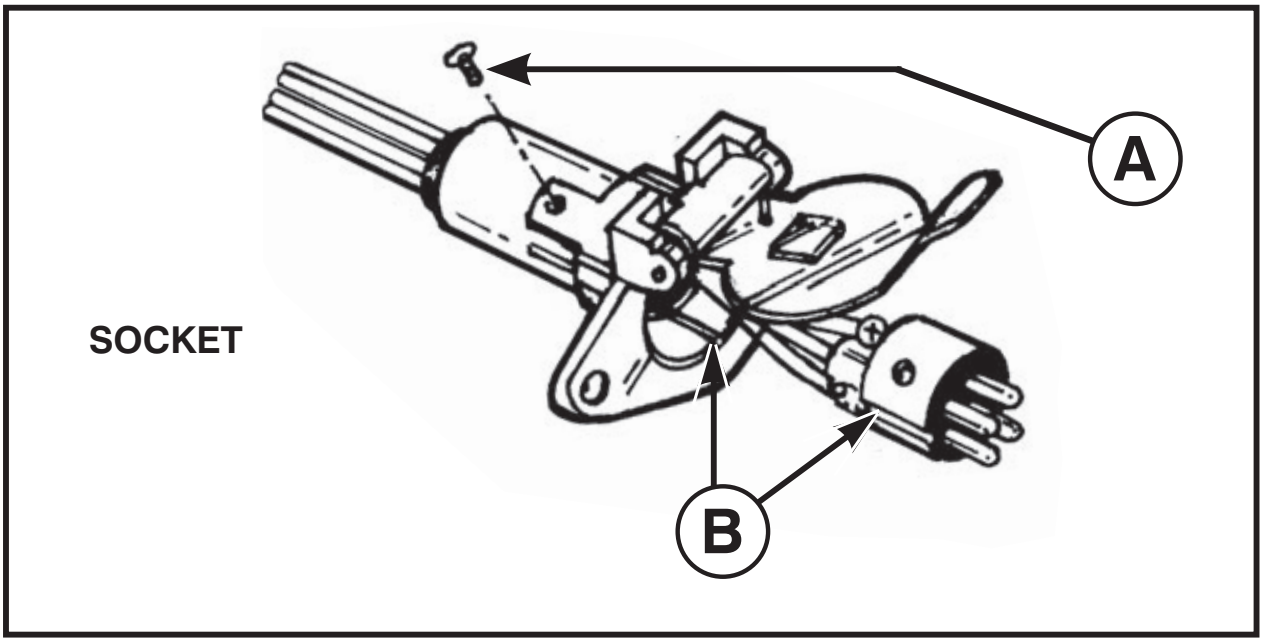

1. Loosen the set screw (A) on the vehicle end socket and remove the socket from housing. Route wiring through socket housing. Strip wires 1/4” and tightly secure them to socket terminals. Align socket keyway with housing key (B) and insert socket into housing. Tighten set screw.
2. Plug trailer into vehicle and test all functions.

LOCATE WIRES BY FUNCTION ONLY

White wire.....Ground

Yellow wire.....Left turn

Green wire .....Right turn

Brown wire .....Taillight

Shop for quality Hopkins Towing products on our website. Learn more about trailer hitches and towing we have.