KC HiLiTES

23 Year Warranty

#6315 - RELAY WIRING HARNESS FOR TWO LIGHTS
(For 2 x 130w Lights Maximum)

PARTS INCLUDED IN YOUR WIRING KIT...

1 - Complete Pre-terminated Wiring Harness
1 - 40A Relay
1 - 30A Rocker Switch
1 - Switch Panel
1 - Wire Splice Connector
1 - 20A or 25A Fuse
1 - 3A Fuse
5 - Screws
6 - Wire Ties

GET YOUR LIGHTS WIRED...

To start, determine where your Lights and Switch will be mounted before installing the Wiring Harness.

Connect the Yellow and White Power Wires Last.
Mount Relay close to the Battery (terminals facing downward) Relay can be grounded directly to the (-) Negative Terminal of the Battery or Chassis Ground.

If Switch Panel is not being used, Drill a ½" hole to mount the Switch. The Switch must be grounded (Earth) to a Chassis or (-) Battery Ground in order to illuminate the Switch.

Connect the Yellow Power Wire to the (+) Positive Terminal of the Battery. Connect the White Power Wire to the (+) Positive Terminal of the Battery or alternative +12v source (accessory fuse, headlight, etc). Do not splice Yellow & White Wires together.

Some States require Fog Lights to be switched with the Low Beams (connect White Wire to Low Beam +12v using supplied Blue Wire Splice Connector). Some States require Driving Lights to be switched with Hi Beams (connect White Wire to High Beam +12v). **Note: Some newer vehicles do not allow this connection to the OE Lighting System.**

Aim your lights before they are securely tightened.

AIMING YOUR LIGHTS...

Fog Lights

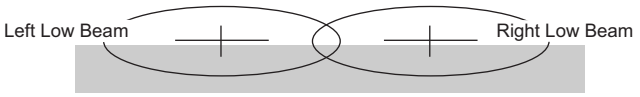

Fog lights should be aimed so that the top cutoff is below the level of your Low Beam Lights.

Driving Lights

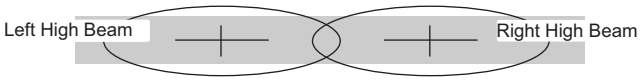

Driving lights should be aimed so that the top cutoff is near the level of your High Beam Lights.

Long Range Lights

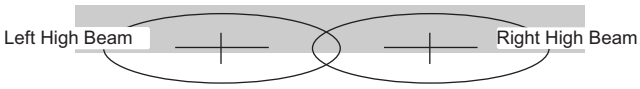

Long Range off road lights are not legal for highway use and should be aimed to see as far ahead as possible.

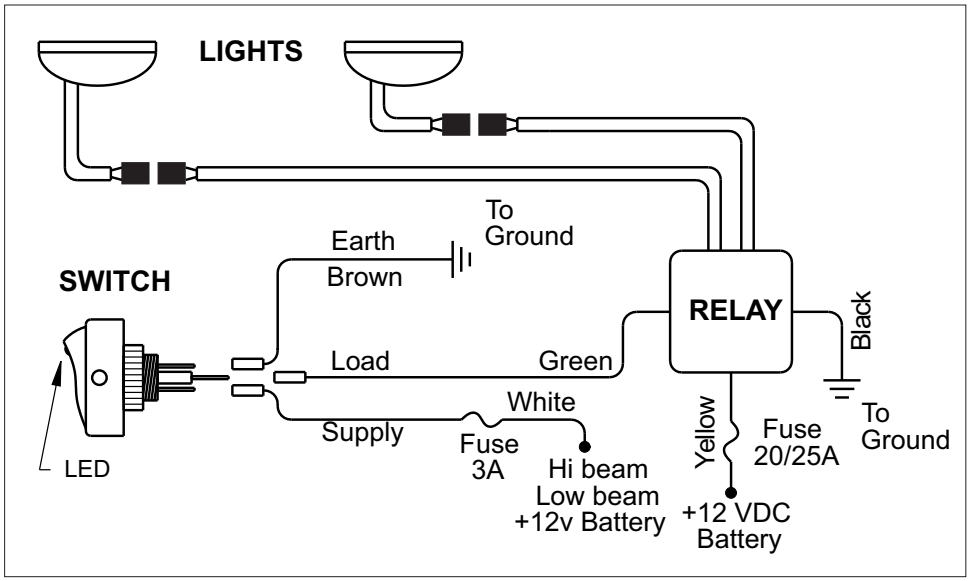

Relay Wiring Diagram

Notes: