HD9135

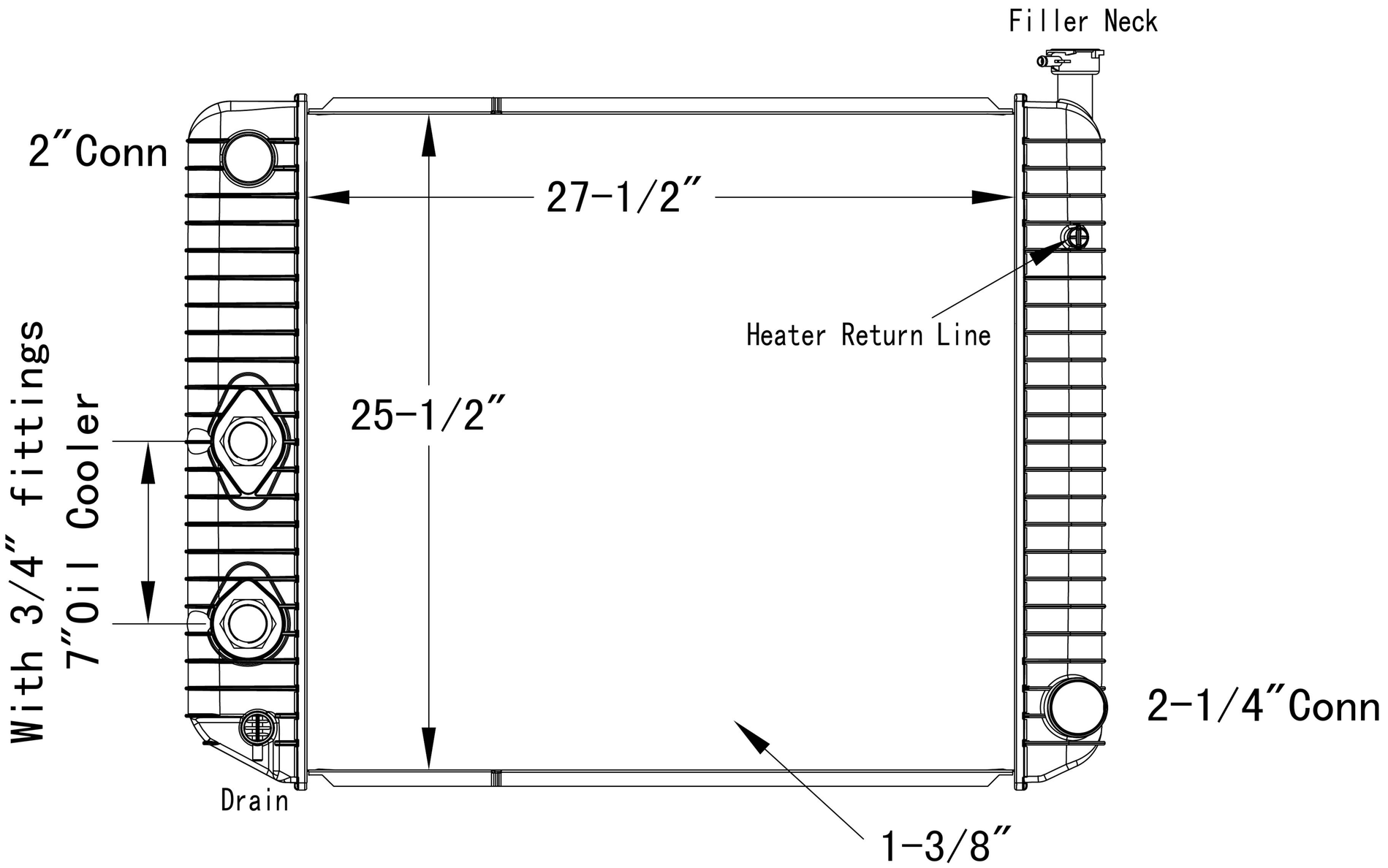
Filler Neck
2″Conn
27-1/2″
Heater Return Line
25-1/2″
With 3/4″ fittings
7″Oil Cooler
2-1/4″Conn
Drain
1-3/8″