PASSAGE (2 BIKE CARRIER) 910XT
PASSAGE (3 BIKE CARRIER) 911XT

PARTS INCLUDED •

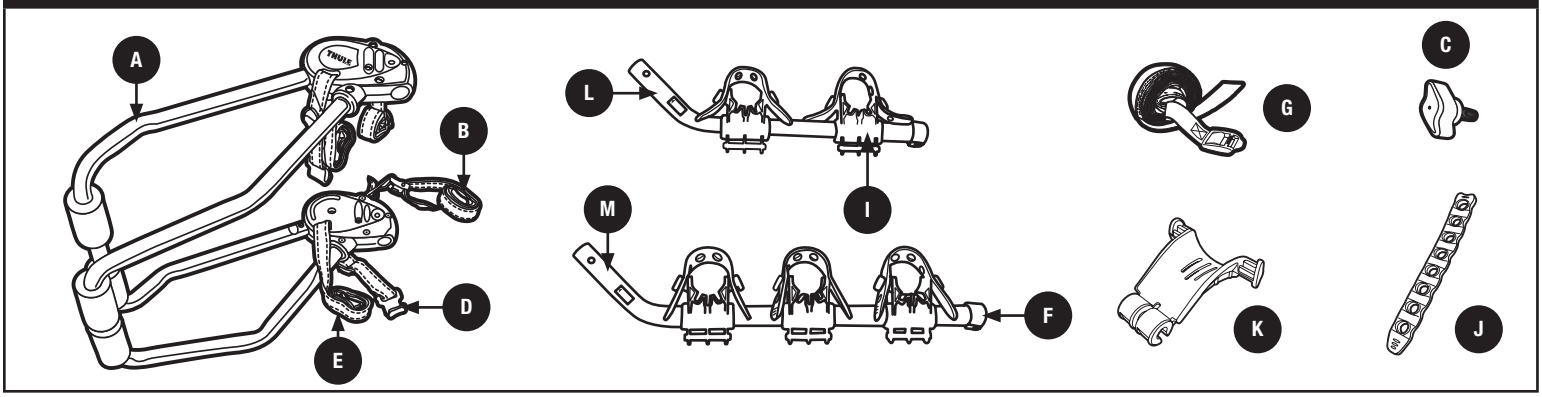

part	description	part number	910XT qty.	911XT qty.
A	910XT/911XT 2 or 3 bike carrier /	———	1	1
B	top strap assembly /	753-2184	2	2
C	2 wing adjustment knob /	753-3095	2	2
D	slide hook assembly w/ buckle /	753-2877	2	2
E	bottom strap (narrow) w/ buckle /	753-0035-07	2	2
F	end cap /	853-2181	2	2
G	tie down strap /	753-1492	1	1
H	screw /	853-5753	2	2
I	stay-put cradle /	853-7887	4	6
J	ripple strap /	852-3006-001	6	9
K	anti sway cage /	852-2903-001	2	3
L	910XT complete bike arms /	752-1096-001	2	–
M	911XT complete bike arms /	752-1097-001	–	2

WARNINGS / LIMITATIONS •

- Number of bicycles carried should not exceed designated carrying capacity for your specific Passage model.
- 910XT (2 bike) max carrying capacity = 70lbs.
- 911XT (3 bike) max carrying capacity = 105lbs.
- Check tightness of all bolts and knobs periodically.
- Check straps for wear and replace if worn.
- Not intended for off-road use.
- Not intended for tandems or recumbents.
- Do not install on a trailer or other towed vehicle.
- Failure to use blue safety strap may result in loss of bicycles.

1

- **Clean trunk/hatch and rear of car.**

2

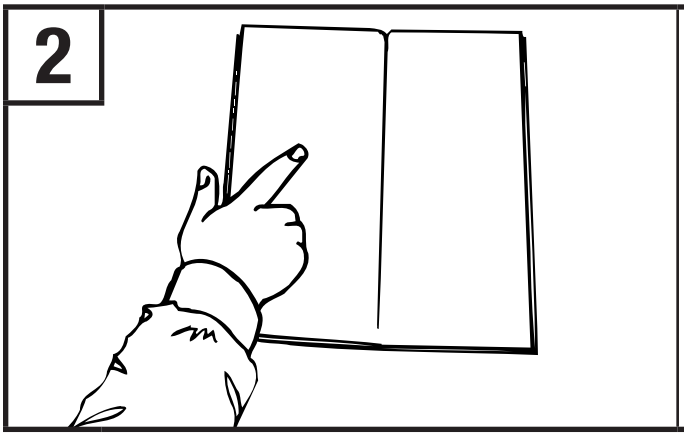

- **Look up your vehicle in the Fit Guide (included with these instructions) for recommended fit number. BE SURE TO READ THE FIT TIPS THAT APPLY TO YOUR VEHICLE.**

3

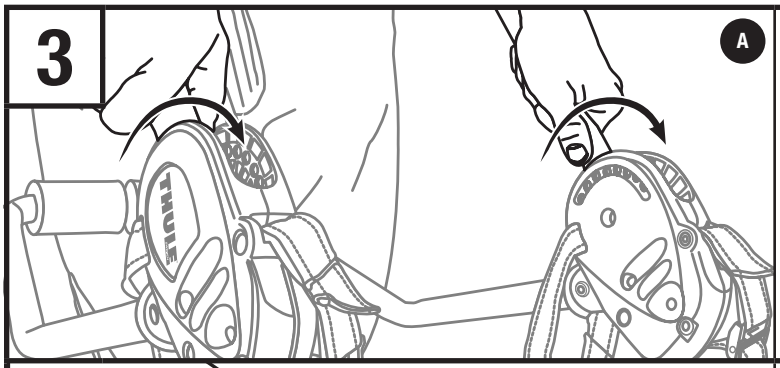

- **Remove both 2 Wing Adjustment Knobs and adjust to correct fit numbers.**

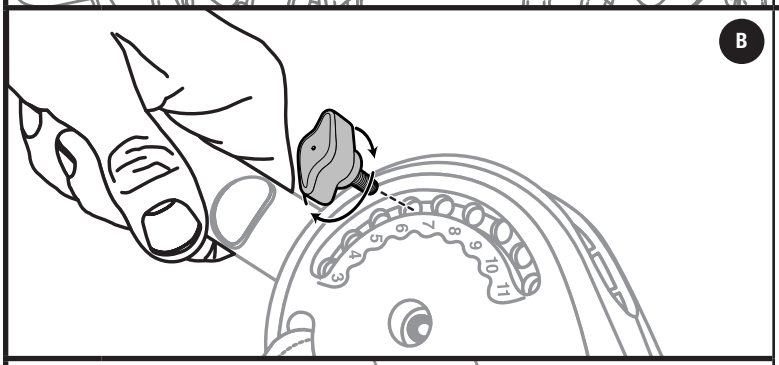

- **Insert both 2 Wing Adjustment Knobs and tighten until knobs are fully seated against fit dial. Be careful not to cross thread.**
- **If having trouble installing knobs place rack on its side.**

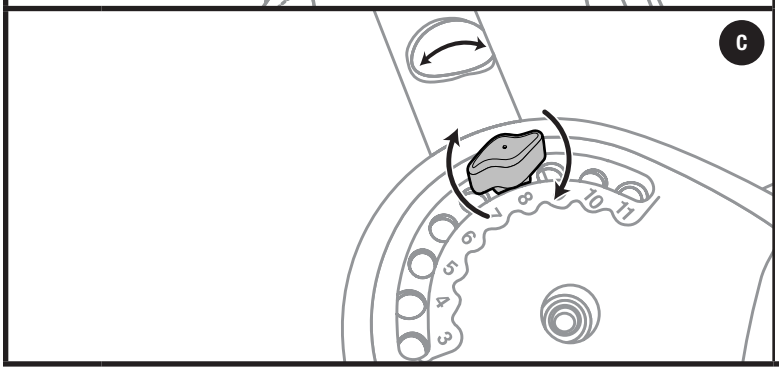

- **Check 2 Wing Adjustment Knobs periodically during use and retighten if needed.**

4

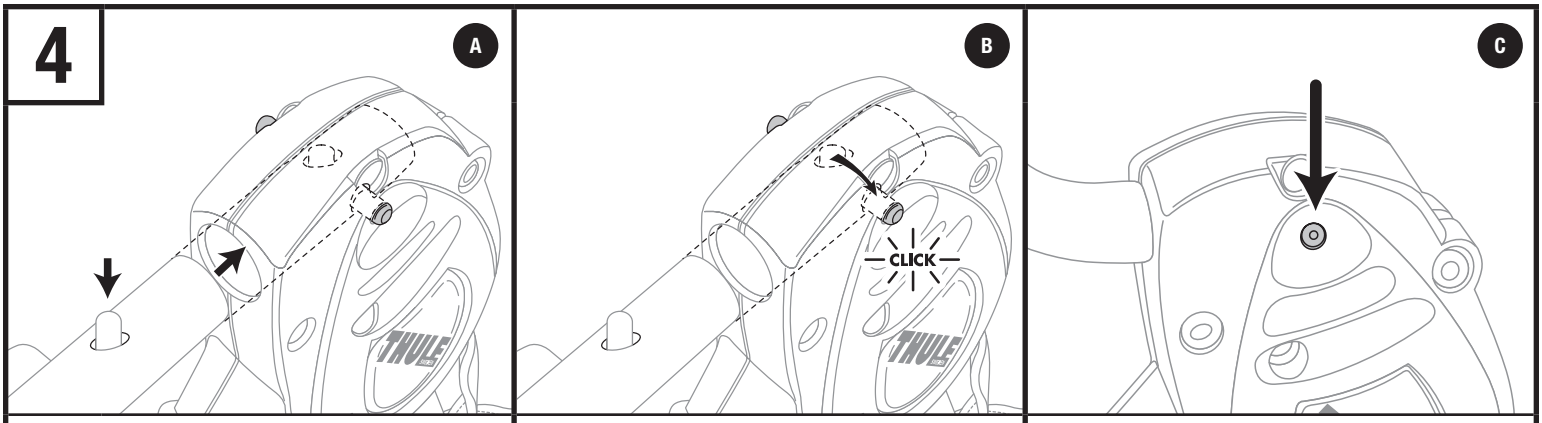

- With buttons squeezed in, firmly slide carrier arms into the hub.
- Rotate arm until button engages in the hub.
- Ensure that buttons are visibly engaged in the hub when finished.

5

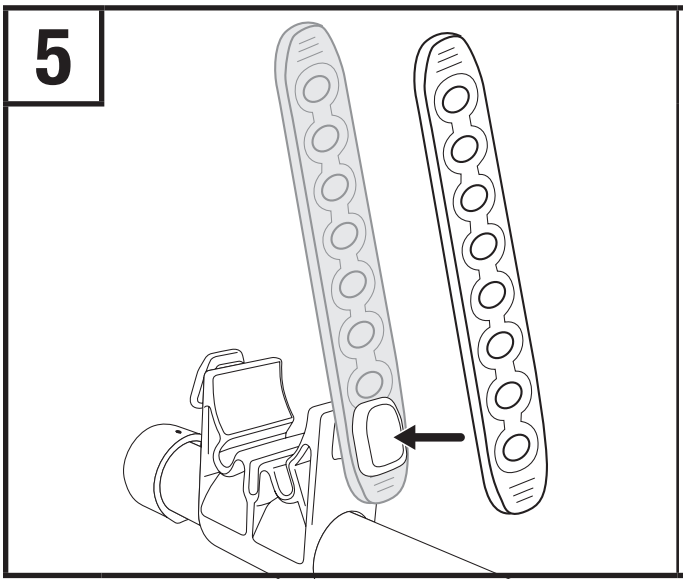

- Install cradle strap as illustrated.

6

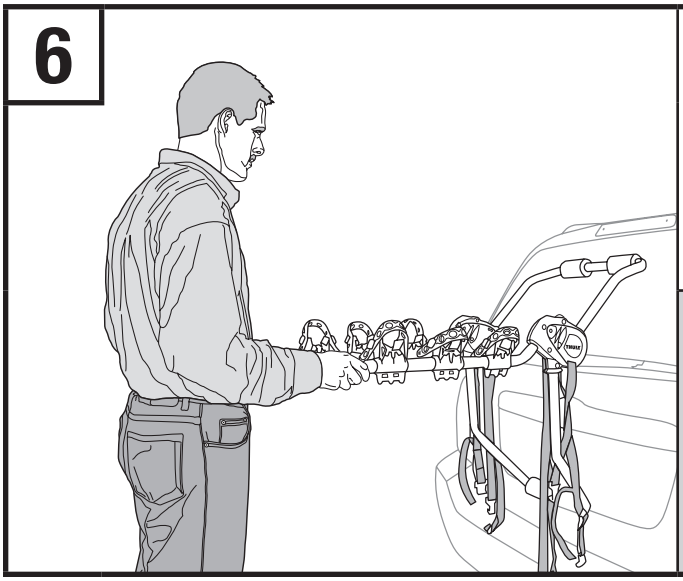

- Mount carrier to the back of vehicle. Refer to Fit Tips for specific placement instructions.

NOTE: Arms should be level or pointing slightly upward.

7

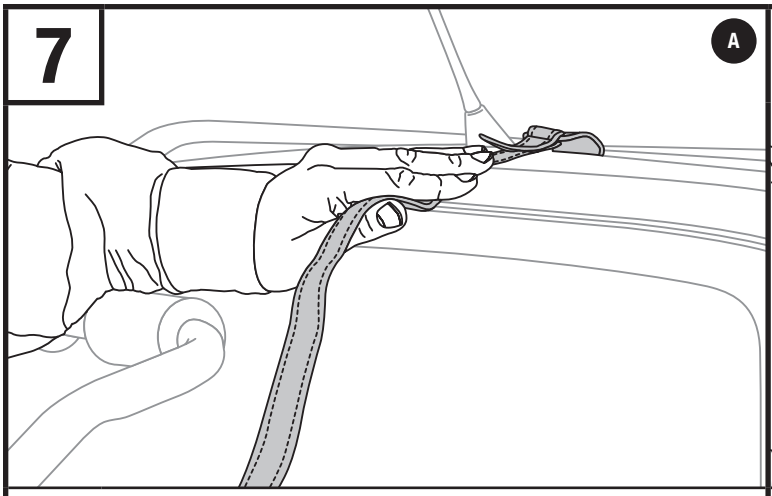

- Attach top strap according to the Fit Tips for your car.

NOTE: If versa clip is required for proper mounting, go to step 15 before continuing.

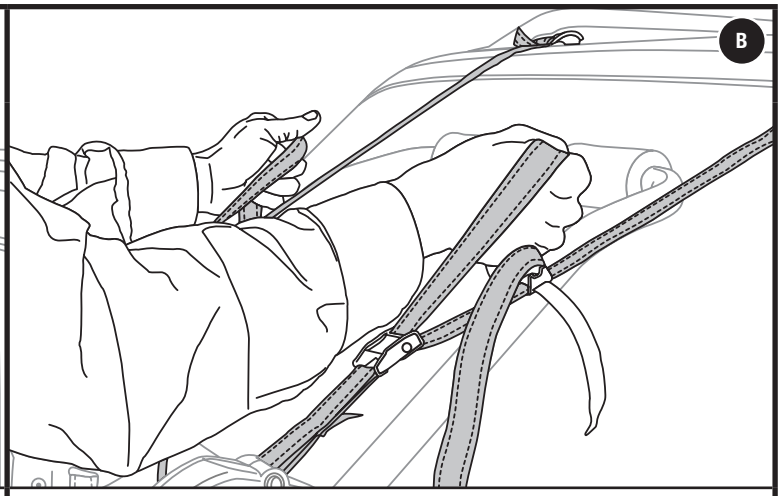

- Tighten top straps, by pulling on the loose end, so the carrier stays in position.

NOTE: Tighten straps only enough to hold rack in place without changing its position as instructed in the fit tips.

8

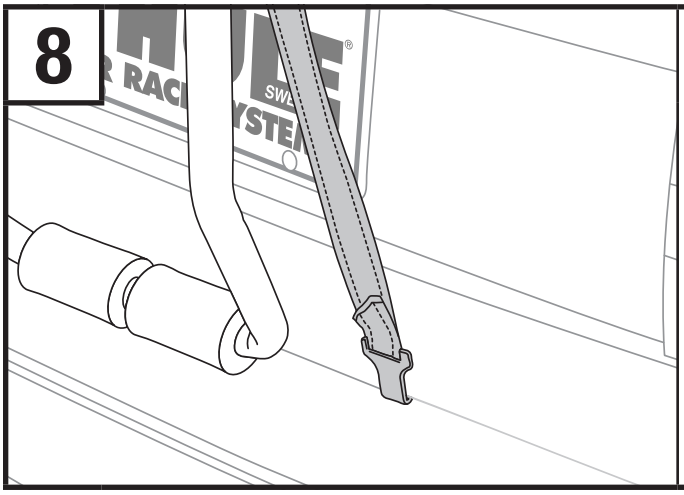

- Attach bottom straps (narrow, grey hooks) according to the Fit Tips for your car. Always make sure that straps are out of the way of hot exhaust gases and not in contact with the muffler or exhaust pipe.
- Be sure lower arm is in correct position.

9

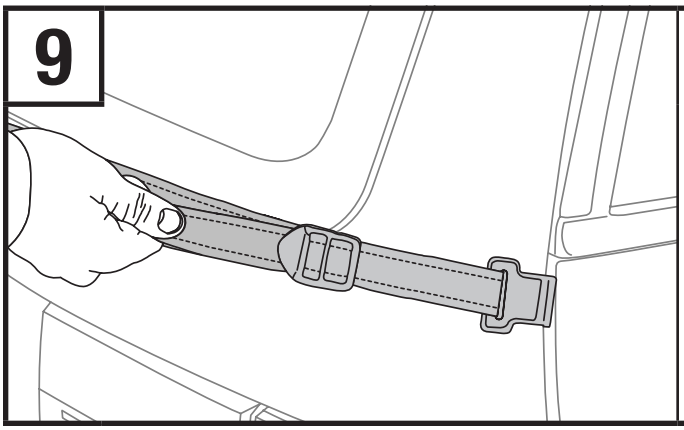

- Attach side straps to side seams of trunk, hatch, or door.

10

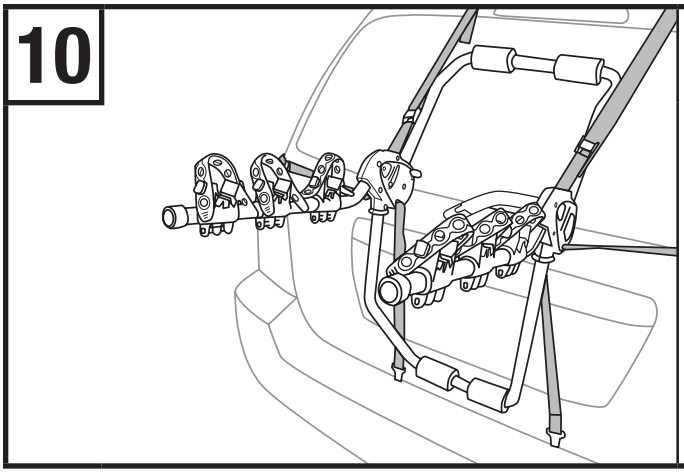

- Retighten all straps to ensure a snug fit to vehicle.
- Roll up loose strap ends and secure.

11 LOADING/SECURING BIKES

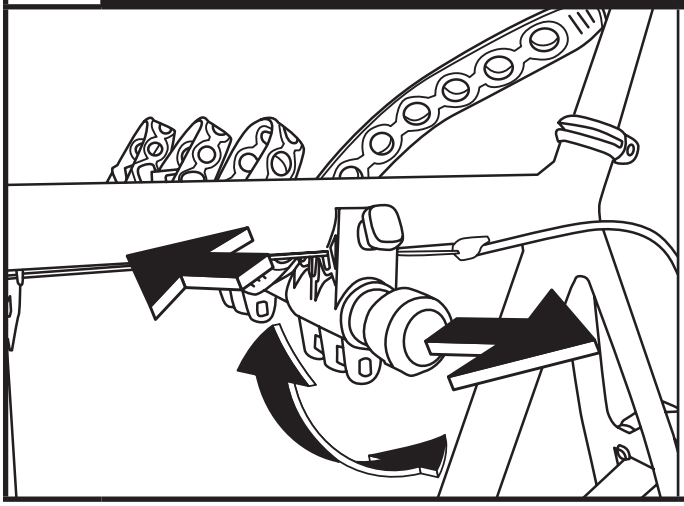

- Load heaviest bike first onto inner most cradle.
- Cradles can be either rotated or shifted on bars to accommodate different bike geometries.
- Alternate direction of bikes when loading.

12

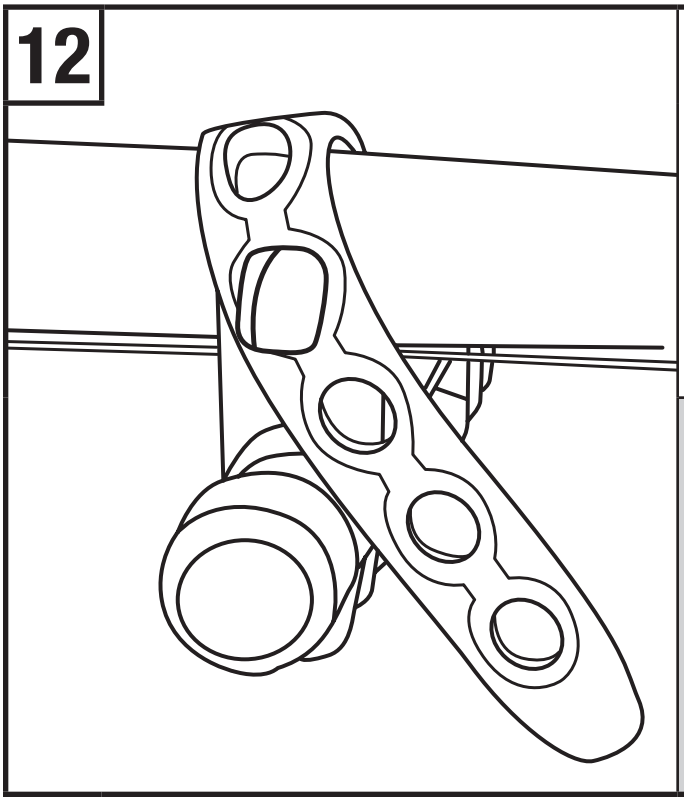

- Ensure straps are tightened securely around bike frame.
- Ensure adequate ground clearance fo bicycle wheels.
- Position bicycles on rack in order to prevent bike to car contact.

NOTE: Cradles can be either rotated or shifted on bars to accommodate different bike geometries.

NOTE: Alternate direction of bikes when loading.

13 ATTACHING STAY-PUT ANTI-SWAY CAGES

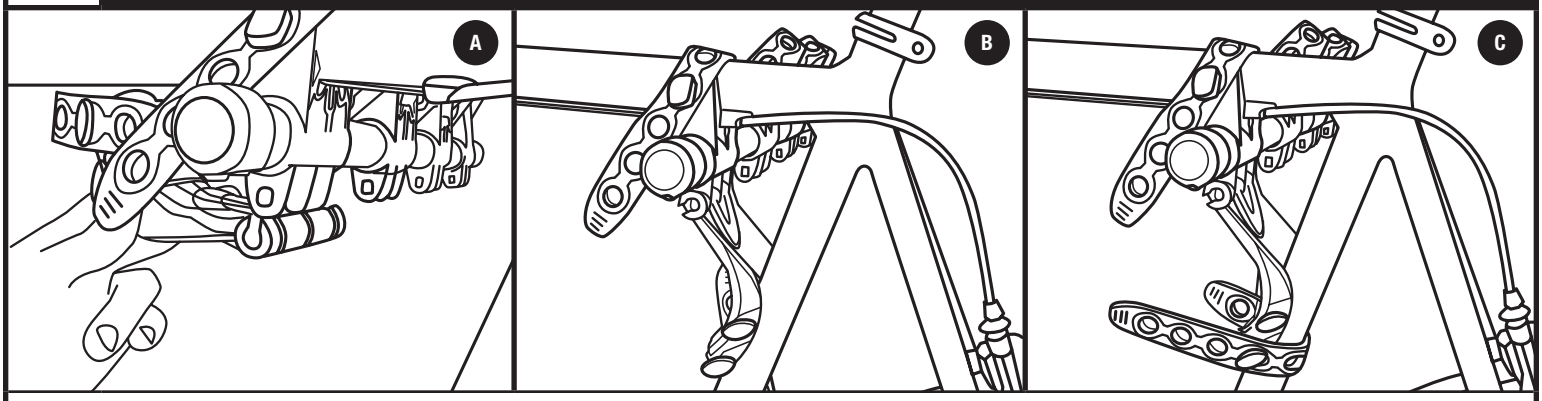

- To attach anti-sway cradle, hold horizontal with smooth edge facing down and slide C-slot opening onto bottom cradle bar. Swing down to vertical position. Place smooth curved surface against bicycle down-tube and attach strap as shown.

14

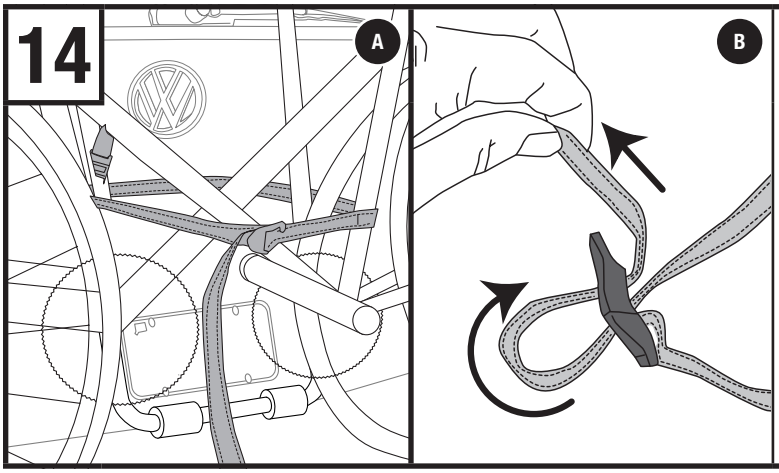

- Using blue load strap provided secure all bikes to the frame of the rack as illustrated.

15 BIKE ARM STORAGE

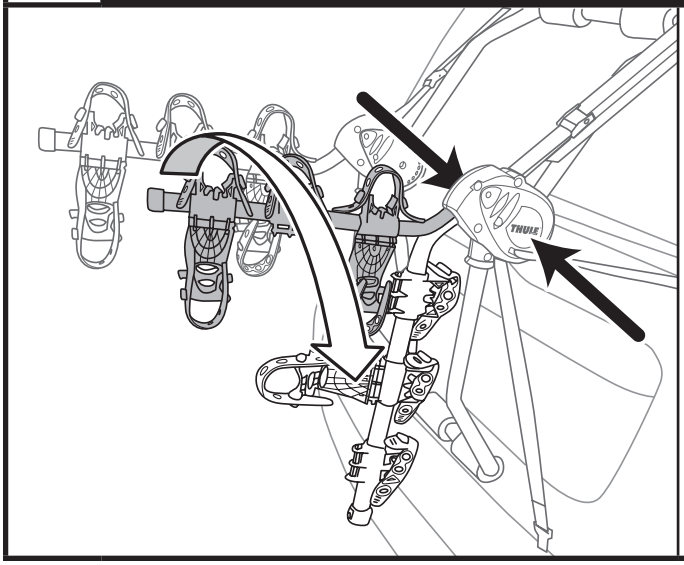

- Squeeze buttons on hub to release arms.
- Rotate arms down.
- Ensure buttons are engaged in hub when finished.

VERSA CLIP USE

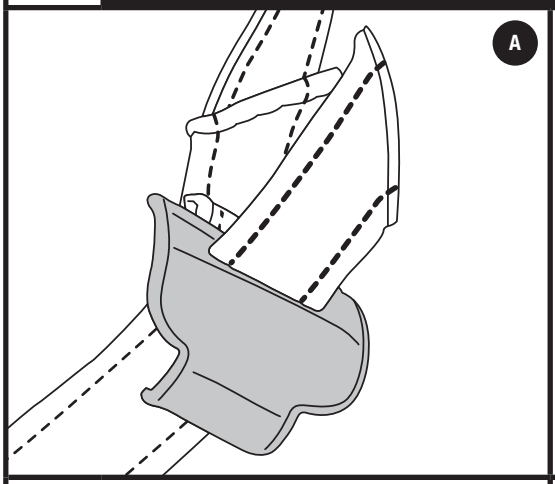

- Remove upper strap from carrier buckle. Thread loose end through slot in hook.

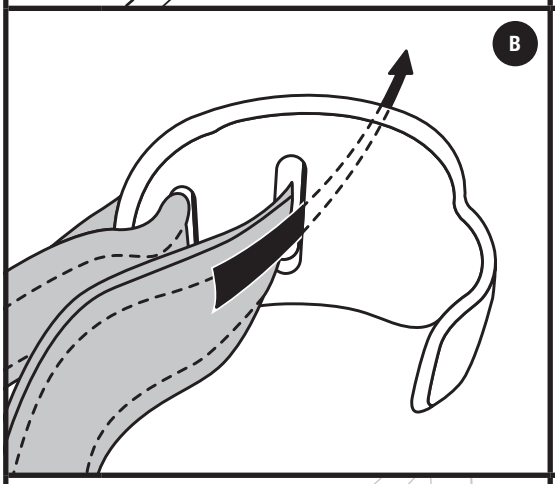

- Pull strap through.

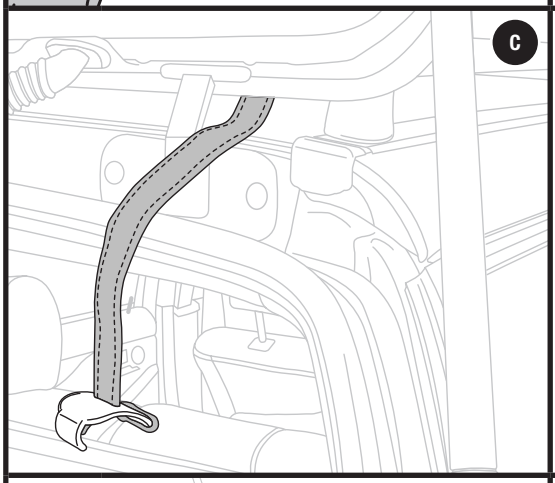

- Open hatch/trunk. Hang hook inside trunk or vehicle.

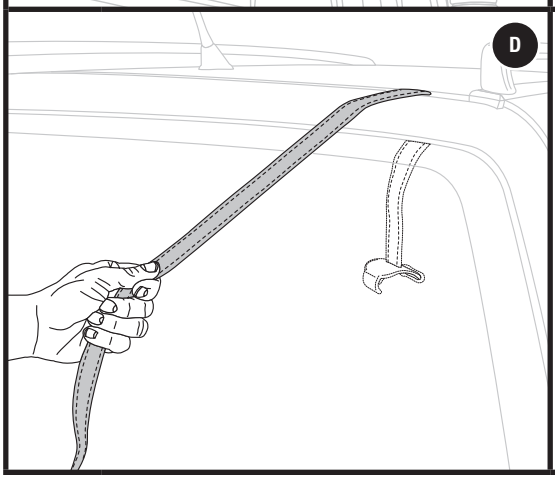

- Close hatch, pull strap tight and install carrier (steps 6–9).

THULE 2012 REAR MOUNTED FIT GUIDE

NOTE: If your vehicle is not listed below, it may be a NO FIT. For the most up to date information consult Thule Fit

ACURA

Vehicle make, model and year		9001 RACEWAY 2	9002 RACEWAY 3	9003 RACEWAY PLATFORM	FIT DIAL SETTING	9009 / 9009XT ARCHWAY 2	9010 / 9010XT ARCHWAY 3	FIT DIAL SETTING	9006 / 9006XT GATEWAY 2	9007 / 9007XT GATEWAY 3	FIT DIAL SETTING	910XT PASSAGE 2	911XT PASSAGE 3 933 VENTURE	FIT DIAL SETTING	
CL 2DR	'01-03	✓	✓	✓	6	✓	✓	6	✓	✓	6	✓	✓	6	101,102,128
	'96-00	✓	✓	✓	6	✓	✓	6	✓	✓	6	✓	✓	6	101,104,125,128
CSX 4DR (Canada)	'12-13	✓	✓	✓	7	✓	✓	7	✓	✓	7	✓	✓	7	101,102,128
	'06-11	✓	✓	✓	7	✓	✓	7	✓	✓	7	✓	✓	7	101,102,128
EL 4DR	'01-06	✓	✓	✓	6	✓	✓	6	✓	✓	6	✓	✓	6	101,102,128
	'96-00	✓			6	✓		6	✓		6	✓		6	101,102,132
Integra 3DR	'94-01	✓	✓	✓	6	✓	✓	6	✓	✓	6	✓	✓	6	101,105,125,128
	'90-93														135,136
Integra 4DR	'94-01	✓			5	✓		5	✓		5	✓		5	101,102,110,132,140
	'90-93														135,136
Legend 2DR	'91-95	✓			5	✓		5	✓		5	✓		5	101,102,140
	'87-90	✓			5	✓		5	✓		5	✓		5	101,102,140
Legend 4DR	'91-95	✓	✓	✓	5	✓	✓	5	✓	✓	5	✓	✓	5	101,102
	'86-90	✓			5	✓		5	✓		5	✓		5	101,103,125,140
MDX	'07-13														137
	'01-06	✓	✓	✓	9	✓	✓	9	✓	✓	9	✓	✓	9	101,102,121,127,128
RDX	'13														133
	'07-12														133
RL 4DR	'05-13	✓	✓	✓	7	✓	✓	7	✓	✓	7	✓	✓	7	101,102,128
	'96-04	✓			6	✓		6	✓		6	✓		6	101,110,132
RLX 4DR	'14														CHECK FOR UPDATE
RSX	'02-06	✓	✓	✓	6	✓	✓	6	✓	✓	6	✓	✓	6	101,102,128
SLX	'96-99														
TL	'12-13	✓	✓	✓	7	✓	✓	7	✓	✓	7	✓	✓	7	101,102,128
	'09-11	✓	✓	✓	7	✓	✓	7	✓	✓	7	✓	✓	7	101,102,128
	'04-08	✓	✓	✓	7	✓	✓	7	✓	✓	7	✓	✓	7	101,102,128
	'99-03	✓	✓	✓	7	✓	✓	7	✓	✓	7	✓	✓	7	101,102,128
	'95-98	✓			5	✓		5	✓		5	✓		5	101,102,132
TSX	'09-13	✓	✓	✓	7	✓	✓	7	✓	✓	7	✓	✓	7	101,102,128
	'04-08	✓	✓	✓	7	✓	✓	7	✓	✓	7	✓	✓	7	101,102,128
TSX Sport Wagon	'12-13	✓	✓	✓	10	✓	✓	10	✓	✓	10	✓	✓	10	101,102,121,128
Vigor	'91-95	✓			5	✓		5	✓		5	✓		5	101,102,132
ZDX	'10-13	✓	✓	✓	8	✓	✓	8	✓	✓	8	✓	✓	8	101,102,121,138

AUDI

80 & 90 Series	'93-95	✓	✓	✓	5	✓	✓	5	✓	✓	5	✓	✓	5	101,102,138
	'88-92	✓	✓	✓	7	✓	✓	7	✓	✓	7	✓	✓	7	101,104
100 & 200 Series	'92-94	✓	✓	✓	5	✓	✓	5	✓	✓	5	✓	✓	5	101,102,138
	'89-91	✓	✓	✓	7	✓	✓	7	✓	✓	7	✓	✓	7	101,131
A3 Sportback 5DR	'06-13	✓	✓	✓	8	✓	✓	8	✓	✓	8	✓	✓	8	101,102,128
A4 4DR	'09-13	✓	✓	✓	6	✓	✓	6	✓	✓	6	✓	✓	6	101,102,116,128
	'02-08	✓	✓	✓	6	✓	✓	6	✓	✓	6	✓	✓	6	101,102,116,128
	'95-01	✓	✓	✓	6	✓	✓	6	✓	✓	6	✓	✓	6	101,102,138
A4 Allroad	'13	✓	✓	✓	9	✓	✓	9	✓	✓	9	✓	✓	9	101,102,121,128
	'01-05	✓	✓	✓	9	✓	✓	9	✓	✓	9	✓	✓	9	101,102,121,128
A4 Wagon	'09-12	✓	✓	✓	9	✓	✓	9	✓	✓	9	✓	✓	9	101,102,121,128
	'02-08	✓	✓	✓	9	✓	✓	9	✓	✓	9	✓	✓	9	101,102,121,128
	'97-01	✓	✓	✓	9	✓	✓	9	✓	✓	9	✓	✓	9	101,102,121,128
A5 2DR	'08-13														NO FIT
A6 4DR	'12-13	✓	✓	✓	6	✓	✓	6	✓	✓	6	✓	✓	6	101,102,138

THULE 2012 REAR MOUNTED FIT GUIDE

NOTE: If your vehicle is not listed below, it may be a NO FIT. For the most up to date information consult Thule Fit

AUDI continued

Vehicle make, model and year		9001 RACEWAY 2	9002 RACEWAY 3	9003 RACEWAY PLATFORM	FIT DIAL SETTING	9009 / 9009XT ARCHWAY 2	9010 / 9010XT ARCHWAY 3	FIT DIAL SETTING	9006 / 9006XT GATEWAY 2	9007 / 9007XT GATEWAY 3	FIT DIAL SETTING	910XT PASSAGE 2	911XT PASSAGE 3 933 VENTURE	FIT DIAL SETTING	
A6 4DR	'05-11	✓	✓	✓	6	✓	✓	6	✓	✓	6	✓	✓	6	101,102,138
	'98-04	✓	✓	✓	6	✓	✓	6	✓	✓	6	✓	✓	6	101,102,138
	'95-97														133
A6 Wagon	'06-11	✓	✓	✓	9	✓	✓	9	✓	✓	9	✓	✓	9	101,102,121,128
	'99-05	✓	✓	✓	9	✓	✓	9	✓	✓	9	✓	✓	9	101,102,121,128
	'97-98														137
	'95-96	✓	✓	✓	8	✓	✓	8	✓	✓	8	✓	✓	8	101,102
A7 Sportback	'12-13														CHECK FOR UPDATE
A8	'11-13	✓	✓	✓	7	✓	✓	7	✓	✓	7	✓	✓	7	101,102,128
	'04-10	✓	✓	✓	7	✓	✓	7	✓	✓	7	✓	✓	7	101,102,128
	'96-03														135
Q5	'09-13														134
Q7	'07-13														134
Quattro 2DR	'90-92														135
RS4 4DR	'09-13	✓	✓	✓	6	✓	✓	6	✓	✓	6	✓	✓	6	101,102,116,128,132
	'04-08	✓	✓	✓	6	✓	✓	6	✓	✓	6	✓	✓	6	101,102,116,128,132
RS7 Sportback	'12-13														CHECK FOR UPDATE
S4 4DR	'09-13	✓	✓	✓	6	✓	✓	6	✓	✓	6	✓	✓	6	101,102,116,128
	'02-08	✓	✓	✓	6	✓	✓	6	✓	✓	6	✓	✓	6	101,102,116,128
	'95-01	✓	✓	✓	6	✓	✓	6	✓	✓	6	✓	✓	6	101,102,138
S4 Wagon	'01-08	✓	✓	✓	9	✓	✓	9	✓	✓	9	✓	✓	9	101,102,121,128
S5 2DR	'08-13														NO FIT
S6 4DR	'12-13	✓	✓	✓	6	✓	✓	6	✓	✓	6	✓	✓	6	101,102,138
	'05-11	✓	✓	✓	6	✓	✓	6	✓	✓	6	✓	✓	6	101,102,138
	'98-04	✓	✓	✓	6	✓	✓	6	✓	✓	6	✓	✓	6	101,102,138
	'95-97														133
S6 Wagon	'02-03	✓	✓	✓	9	✓	✓	9	✓	✓	9	✓	✓	9	101,102,121,128
S7 Sportback	'12-13														CHECK FOR UPDATE
S8	'11-13	✓	✓	✓	7	✓	✓	7	✓	✓	7	✓	✓	7	101,102,128
	'04-10	✓	✓	✓	7	✓	✓	7	✓	✓	7	✓	✓	7	101,102,128
	'01-03														135
TT	'07-13														133
	'00-06														133

BMW

1 Series 3DR	'08-13					✓		7	✓		7	✓		7	101,102,128
1 Series 3DR Convertible	'08-13					✓		7	✓		7	✓		7	101,102,128,156
3 Series 2DR	'06-13	✓			7	✓		7	✓		7	✓		7	101,102,128,132
	'00-05	✓	✓	✓	7	✓	✓	7	✓	✓	7	✓	✓	7	101,102,128
	'92-99	✓	✓	✓	6	✓	✓	6	✓	✓	6	✓	✓	6	101,102,138
	'76-91	✓	✓	✓	5	✓	✓	5	✓	✓	5	✓	✓	5	101,109
3 Series 4DR	'12-13	✓			7	✓		7	✓		7	✓		7	101,102,128,132
	'06-11	✓			7	✓		7	✓		7	✓		7	101,102,128,132
	'99-05	✓	✓	✓	6	✓	✓	6	✓	✓	6	✓	✓	6	101,102,138
	'92-98	✓	✓	✓	6	✓	✓	6	✓	✓	6	✓	✓	6	101,102,138
	'76-91	✓	✓	✓	5	✓	✓	5	✓	✓	5	✓	✓	5	101,109
3 Series Compact Ti	'95-99														134
3 Series Wagon	'11-13	✓			9	✓		9	✓		9	✓		9	101,102,121,128,132
	'00-10	✓			9	✓		9	✓		9	✓		9	101,102,121,128,132
5 Series 4DR	'11-13	✓	✓	✓	8	✓	✓	8	✓	✓	8	✓	✓	8	101,102,128

THULE 2012 REAR MOUNTED FIT GUIDE

NOTE: If your vehicle is not listed below, it may be a NO FIT. For the most up to date information consult Thule Fit

BMW continued

Vehicle make, model and year		9001 RACEWAY 2	9002 RACEWAY 3	9003 RACEWAY PLATFORM	FIT DIAL SETTING	9009 / 9009XT ARCHWAY 2	9010 / 9010XT ARCHWAY 3	FIT DIAL SETTING	9006 / 9006XT GATEWAY 2	9007 / 9007XT GATEWAY 3	FIT DIAL SETTING	910XT PASSAGE 2	911XT PASSAGE 3 933 VENTURE	FIT DIAL SETTING	
5 Series 4DR	'04-10	✓	✓	✓	8	✓	✓	8	✓	✓	8	✓	✓	8	101,102,128
	'97-03	✓	✓	✓	5	✓	✓	5	✓	✓	5	✓	✓	5	101,102,138
	'89-95	✓	✓	✓	5	✓	✓	5	✓	✓	5	✓	✓	5	101,102,138
5 Series Gran Turismo 5DR	'10-13														133
5 Series Wagon	'11-13	✓			8	✓		8	✓		8	✓		8	101,102,121,128,132
	'04-10	✓			8	✓		8	✓		8	✓		8	101,102,121,128,132
	'99-03	✓			8	✓		8	✓		8	✓		8	101,102,121,128,132
	'92-96														134
6 Series 2DR	'11-13														CHECK FOR UPDATE
	'04-10	✓	✓	✓	6	✓	✓	7	✓	✓	7	✓	✓	7	101,102,128
6 Series 2DR Convertible	'11-13														CHECK FOR UPDATE
	'04-10	✓	✓	✓	6	✓	✓	7	✓	✓	7	✓	✓	7	101,102,128
7 Series 4DR	'06-13	✓	✓	✓	7	✓	✓	7	✓	✓	7	✓	✓	7	101,102,128
	'02-05	✓	✓	✓	7	✓	✓	7	✓	✓	7	✓	✓	7	101,102,128
	'95-01														133
	'88-94														133
X1	'11-13														CHECK FOR UPDATE
X3	'11-13														134
	'04-10														134
X5	'07-13					✓	✓	8	✓	✓	8	✓	✓	8	101,102,121,138
	'00-06														135,137
X6	'09-13	✓	✓	✓	8	✓	✓	8	✓	✓	8	✓	✓	8	101,102,121,138
Z3	'96-02														133
Z4	'03-13														133
Z8	'00-03														135

BUICK

Allure (Canada)	'10-13	✓			6	✓		6	✓		6	✓		6	101,102,116,128,132
	'05-09	✓			6	✓		6	✓		6	✓		6	101,102,116,128,132
Century 4DR	'97-05	✓			6	✓		6	✓		6	✓		6	101,105,125,132,138
	'82-96														132
Century Wagon	'82-96	✓			8	✓		8	✓		8	✓		8	101,105,125,132,138
Enclave	'08-13	✓	✓	✓	9	✓	✓	9	✓	✓	9	✓	✓	9	101,102,121,128
Encore	'13	✓	✓	✓	8	✓	✓	8	✓	✓	8	✓	✓	8	101,102,121,128
LaCrosse	'10-13	✓			6	✓		6	✓		6	✓		6	101,102,116,128,132
	'05-09	✓			6	✓		6	✓		6	✓		6	101,102,116,128,132
LeSabre 4DR	'00-05	✓	✓	✓	5	✓	✓	5	✓	✓	5	✓	✓	5	101,138,142
	'92-99	✓	✓	✓	5	✓	✓	5	✓	✓	5	✓	✓	5	101,102,128
Lucerne	'06-11	✓	✓	✓	8	✓	✓	8	✓	✓	8	✓	✓	8	101,102,128
Park Avenue 4DR	'97-05	✓	✓	✓	6	✓	✓	6	✓	✓	6	✓	✓	6	101,138,142
	'91-96	✓	✓	✓	6	✓	✓	6	✓	✓	6	✓	✓	6	101,105,138
Ranier	'04-07														135,137
Reatta	'88-91														134
Regal 2DR	'88-96	✓	✓	✓	6	✓	✓	6	✓	✓	6	✓	✓	6	101,105,138
Regal 4DR	'10-13														CHECK FOR UPDATE
	'97-04														135
	'91-96	✓	✓	✓	6	✓	✓	6	✓	✓	6	✓	✓	6	101,105,138
Rendezvous	'02-07	✓			10	✓		10	✓		10	✓		10	101,112,121,125,132,138
Riviera	'95-99														135
Roadmaster	'91-96														134

THULE 2012 REAR MOUNTED FIT GUIDE

NOTE: If your vehicle is not listed below, it may be a NO FIT. For the most up to date information consult Thule Fit

BUICK continued

Vehicle make, model and year		9001 RACEWAY 2	9002 RACEWAY 3	9003 RACEWAY PLATFORM	FIT DIAL SETTING	9009 / 9009XT ARCHWAY 2	9010 / 9010XT ARCHWAY 3	FIT DIAL SETTING	9006 / 9006XT GATEWAY 2	9007 / 9007XT GATEWAY 3	FIT DIAL SETTING	910XT PASSAGE 2	911XT PASSAGE 3 933 VENTURE	FIT DIAL SETTING	
Skylark 2DR	'88-91	✓			6	✓		6	✓		6	✓		6	101,105,132
Skylark 4DR	'92-97	✓			5	✓		5	✓		5	✓		5	101,105,117,118
	'86-91	✓			6	✓		6	✓		6	✓		6	101,105,132
Terraza	'05-07	✓	✓	✓	11	✓	✓	11	✓	✓	11	✓	✓	11	101,102,121,128
Verano 4DR	'12-13	✓	✓	✓	7	✓	✓	7	✓	✓	7	✓	✓	7	101,102,128

CADILLAC

ATS 2DR	'13														CHECK FOR UPDATE
Catera	'97-01	✓	✓	✓	6	✓	✓	6	✓	✓	6	✓	✓	6	101,105,125,128
CTS 2DR	'10-13														133
CTS 4DR	'10-13	✓			8	✓		7	✓		7	✓		7	101,102,141
	'03-09	✓	✓	✓	8	✓	✓	7	✓	✓	7	✓	✓	7	101,102,141
CTS Sport Wagon 5DR	'10-13														133
DeVille 4DR	'00-05	✓	✓	✓	7	✓	✓	7	✓	✓	7	✓	✓	7	101,102,128
	'94-99	✓	✓	✓	6	✓	✓	6	✓	✓	6	✓	✓	6	101,102,138
DTS	'06-11	✓	✓	✓	7	✓	✓	7	✓	✓	7	✓	✓	7	101,102,128
Eldorado 2DR	'94-02														133
	'92-93	✓	✓	✓	6	✓	✓	6	✓	✓	6	✓	✓	6	101,102,138
	'87-91														135
Escalade	'07-13														134
	'01-06	✓			10	✓		10	✓		10	✓		10	101,106,121,132,138
	'99-00	✓			10	✓		10	✓		10	✓		10	101,106,121,132,138
Escalade ESV	'07-13														134
	'03-06														134,137
Escalade EXT	'02-13														153
Fleetwood 4DR	'93-95	✓	✓	✓	6	✓	✓	6	✓	✓	6	✓	✓	6	101,111,138
Seville	'98-03														135
Seville STS	'98-03														135
	'92-97														133
SRX	'10-13	✓	✓	✓	10	✓	✓	10	✓	✓	10	✓	✓	10	101,102,121,128,129
	'04-09	✓	✓	✓	10	✓	✓	10	✓	✓	10	✓	✓	10	101,102,121,128,129
STS	'05-11														135
XTS	'13														CHECK FOR UPDATE
XLR	'04-09														135,137

CHEVROLET

Astro Van	'90-05														137
Avalanche	'02-13														
Aveo 4DR	'07-11	✓			7	✓		7	✓		7	✓		7	101,102,128,132
	'04-06	✓			8	✓		8	✓		8	✓		8	101,128,132,147
Aveo 5DR	'07-11	✓			9	✓		9	✓		9	✓		9	101,128,132,147
	'04-06	✓			10	✓		10	✓		10	✓		10	101,128,132,147
Beretta 2DR	'87-96	✓			6	✓		6	✓		6	✓		6	101,105,132
Blazer 2DR	'95-05														
Blazer 4DR	'95-02														
Camaro	'10-13														134
	'93-02														134
	'82-92														134
Caprice 4DR	'91-96	✓	✓	✓	6	✓	✓	6	✓	✓	6	✓	✓	6	101,105
Caprice Wagon	'91-96														134

THULE 2012 REAR MOUNTED FIT GUIDE

NOTE: If your vehicle is not listed below, it may be a NO FIT. For the most up to date information consult Thule Fit

CHEVROLET continued

Vehicle make, model and year		9001 RACEWAY 2	9002 RACEWAY 3	9003 RACEWAY PLATFORM	FIT DIAL SETTING	9009 / 9009XT ARCHWAY 2	9010 / 9010XT ARCHWAY 3	FIT DIAL SETTING	9006 / 9006XT GATEWAY 2	9007 / 9007XT GATEWAY 3	FIT DIAL SETTING	910XT PASSAGE 2	911XT PASSAGE 3 933 VENTURE	FIT DIAL SETTING	
Skylark 2DR	'88-91	✓			6	✓		6	✓		6	✓		6	101,105,132
Skylark 4DR	'92-97	✓			5	✓		5	✓		5	✓		5	101,105,117,118
	'86-91	✓			6	✓		6	✓		6	✓		6	101,105,132
Terraza	'05-07	✓	✓	✓	11	✓	✓	11	✓	✓	11	✓	✓	11	101,102,121,128
Verano 4DR	'12-13	✓	✓	✓	7	✓	✓	7	✓	✓	7	✓	✓	7	101,102,128
Cavalier	'82-94	✓	✓	✓	6	✓	✓	6	✓	✓	6	✓	✓	6	101,105
Cavalier 2DR	'95-04	✓			7	✓		7	✓		7	✓		7	101,132,142
Cavalier 4DR	'95-04	✓			7	✓		7	✓		7	✓		7	101,132,142
Cavalier Wagon	'88-94	✓	✓	✓	9	✓	✓	9	✓	✓	9	✓	✓	9	101,105,127
Cavalier Z24	'82-94														134
Celebrity Wagon	'90-91	✓	✓	✓	8	✓	✓	8	✓	✓	8	✓	✓	8	101,105,125,138
Celebrity	'88-91														135
Cobalt 2DR	'05-10	✓	✓	✓	7	✓	✓	7	✓	✓	7	✓	✓	7	101,102,128
Cobalt 4DR	'05-10	✓	✓	✓	7	✓	✓	7	✓	✓	7	✓	✓	7	101,110,128
Colorado	'04-13														153
Corsica 4DR	'87-96	✓	✓	✓	6	✓	✓	6	✓	✓	6	✓	✓	6	101,105,127
Corsica Hatchback	'90-95														134
Corvette	'05-13														134
	'99-04														134
Cruze 4DR	'11-13	✓	✓	✓	7	✓	✓	7	✓	✓	7	✓	✓	7	101,102,128
Cruze Eco 4DR	'11-13	✓	✓	✓	7	✓	✓	7	✓	✓	7	✓	✓	7	101,102,128
Equinox	'10-13	✓	✓	✓	9	✓	✓	9	✓	✓	9	✓	✓	9	101,112,121,138
	'05-09	✓	✓	✓	9	✓	✓	9	✓	✓	9	✓	✓	9	101,112,121,138
EuroSport	'88-91														135
Full Size Blazer	'91-94														148
Full Size Pickup	'79-87														
Full Size Pickup / CK	'88-00														148
HHR	'06-11	✓	✓	✓	11	✓	✓	11	✓	✓	11	✓	✓	11	101,102,121,128
Impala	'06-13	✓	✓	✓	7	✓	✓	7	✓	✓	7	✓	✓	7	101,102,128
	'00-05	✓	✓	✓	6	✓	✓	6	✓	✓	6	✓	✓	6	101,116,128,142
Lumina 2DR	'90-94	✓	✓	✓	6	✓	✓	6	✓	✓	6	✓	✓	6	101,108
Lumina 4DR	'90-01	✓	✓	✓	6	✓	✓	6	✓	✓	6	✓	✓	6	101,108
Lumina APV Van	'90-96														134
Malibu	'13	✓	✓	✓	7	✓	✓	7	✓	✓	7	✓	✓	7	101,102,127,128
	'08-12	✓	✓	✓	7	✓	✓	7	✓	✓	7	✓	✓	7	101,102,127,128
	'04-07	✓	✓	✓	7	✓	✓	7	✓	✓	7	✓	✓	7	101,102,128
	'97-03	✓			6	✓		6	✓		6	✓		6	101,102,116,125,128,129,132
Malibu Maxx Wagon	'04-07	✓	✓	✓	8	✓	✓	8	✓	✓	8	✓	✓	8	101,102,128
Metro 3DR	'98-01	✓			8	✓		8	✓		8	✓		8	101,102,132
Metro 4DR	'98-01	✓			6	✓		6	✓		6	✓		6	101,102,132,140
Monte Carlo	'06-07	✓	✓	✓	7	✓	✓	7	✓	✓	7	✓	✓	7	101,102,128
	'00-05	✓	✓	✓	6	✓	✓	6	✓	✓	6	✓	✓	6	101,102,128
	'95-99														135
Orlando 5DR (Canada)	'12-13														CHECK FOR UPDATE
Prizm	'98-02	✓			7	✓		7	✓		7	✓		7	101,102,116,128,132
S-10 Blazer 2DR	'83-94														135
S-10 Blazer 4DR	'83-94														135
S-10	'94-03														148
S-10	'83-93														148
Silverado	'07-13														148

THULE 2012 REAR MOUNTED FIT GUIDE

NOTE: If your vehicle is not listed below, it may be a NO FIT. For the most up to date information consult Thule Fit

CHEVROLET continued

Vehicle make, model and year		9001 RACEWAY 2	9002 RACEWAY 3	9003 RACEWAY PLATFORM	FIT DIAL SETTING	9009 / 9009XT ARCHWAY 2	9010 / 9010XT ARCHWAY 3	FIT DIAL SETTING	9006 / 9006XT GATEWAY 2	9007 / 9007XT GATEWAY 3	FIT DIAL SETTING	910XT PASSAGE 2	911XT PASSAGE 3 933 VENTURE	FIT DIAL SETTING	
Silverado / Silverado Classic	'99-07														148
Sonic 4DR	'12-13	✓	✓	✓	7	✓	✓	7	✓	✓	7	✓	✓	7	101,102,128
Sonic 5DR	'12-13														CHECK FOR UPDATE
Spectrum 2DR	'85-88	✓			7	✓		7	✓		7	✓		7	101,102,132,138
Spectrum 4DR	'85-88	✓			6	✓		6	✓		6	✓		6	101,102,132
Suburban	'07-13														134
	'00-06	✓			10	✓		10	✓		10	✓		10	101,106,121,132,138
	'92-99	✓			10	✓		10	✓		10	✓		10	101,106,128,132
Tahoe	'07-13														134
	'00-06	✓			10	✓		10	✓		10	✓		10	101,106,121,132,138
Tahoe 2DR	'95-99	✓			10	✓		10	✓		10	✓		10	101,106,128,132
Tahoe 4DR	'95-99	✓			10	✓		10	✓		10	✓		10	101,106,128,132
Tracker	'99-04														
Trax (Canada)	'13	✓	✓	✓	8	✓	✓	8	✓	✓	8	✓	✓	8	101,102,121,128
TrailBlazer 4DR	'02-09														135,137
TrailBlazer EXT 4DR	'02-06														135,137
Traverse	'09-13	✓	✓	✓	9	✓	✓	9	✓	✓	9	✓	✓	9	101,102,121,128
Uplander	'05-08	✓	✓	✓	11	✓	✓	11	✓	✓	11	✓	✓	11	101,102,121,128
Venture	'97-04	✓	✓	✓	10	✓	✓	10	✓	✓	10	✓	✓	10	101,106,121,138
Volt	'11-13	✓	✓		8	✓	✓	8	✓	✓	8	✓	✓	8	101,102,128

CHRYSLER

200 4DR	'11-13	✓	✓	✓	7	✓	✓	7	✓	✓	7	✓	✓	7	101,102,128
300	'11-13	✓	✓	✓	7	✓	✓	7	✓	✓	7	✓	✓	7	101,102,128
	'05-10	✓	✓	✓	7	✓	✓	7	✓	✓	7	✓	✓	7	101,102,128
300M	'98-04	✓	✓	✓	6	✓	✓	6	✓	✓	6	✓	✓	6	101,102,128
Aspen	'07-09	✓	✓	✓	11	✓	✓	11	✓	✓	11	✓	✓	11	101,102,121,128
Cirrus	'95-00	✓	✓	✓	6	✓	✓	6	✓	✓	6	✓	✓	6	101,106,125
Concorde	'98-04	✓	✓	✓	6	✓	✓	6	✓	✓	6	✓	✓	6	101,102,128
	'93-97														133
Conquest	'85-89														134,135
Crossfire	'04-08														135
LeBaron Coupe	'85-89	✓			6	✓		6	✓		6	✓		6	101,105,132,138
LeBaron 4DR	'94-96	✓			6	✓		6	✓		6	✓		6	101,105,132
LHS	'98-02	✓	✓	✓	6	✓	✓	6	✓	✓	6	✓	✓	6	101,102,128
	'91-97														133
New Yorker	'91-96														133
New Yorker 5th Ave.	'91-93														133, 135
Pacifica	'04-08	✓			9	✓		9	✓		9	✓		9	101,102,121,138
PT Cruiser	'01-10	✓	✓	✓	10	✓	✓	10	✓	✓	10	✓	✓	10	101,102,121,128,129
Sebring 2DR (Hardtop)	'01-06	✓			6	✓		6	✓		6	✓		6	101,102,116,128,132
	'95-00														133,135
Sebring 4DR	'07-10	✓			6	✓		6	✓		6	✓		6	101,102,116,128,132
	'01-06	✓			6	✓		6	✓		6	✓		6	101,102,116,128,132
Town & Country	'11-13	✓	✓	✓	11	✓	✓	11	✓	✓	11	✓	✓	11	101,102,121,128
	'08-10	✓	✓	✓	11	✓	✓	11	✓	✓	11	✓	✓	11	101,102,121,128
	'01-07	✓	✓	✓	10	✓	✓	10	✓	✓	10	✓	✓	10	101,102,121
	'96-00	✓			10	✓		10	✓		10	✓		10	101,102,121,139
	'91-95	✓			10	✓		10	✓		10	✓		10	101,102,121,139
Voyager / Grand Voyager	'01-03	✓	✓	✓	10	✓	✓	10	✓	✓	10	✓	✓	10	101,102,121

THULE 2012 REAR MOUNTED FIT GUIDE

NOTE: If your vehicle is not listed below, it may be a NO FIT. For the most up to date information consult Thule Fit

DODGE

Vehicle make, model and year		9001 RACEWAY 2	9002 RACEWAY 3	9003 RACEWAY PLATFORM	FIT DIAL SETTING	9009 / 9009XT ARCHWAY 2	9010 / 9010XT ARCHWAY 3	FIT DIAL SETTING	9006 / 9006XT GATEWAY 2	9007 / 9007XT GATEWAY 3	FIT DIAL SETTING	910XT PASSAGE 2	911XT PASSAGE 3 933 VENTURE	FIT DIAL SETTING	
Aries	'81-89														135
Avenger	'07-13	✓	✓	✓	7	✓	✓	7	✓	✓	7	✓	✓	7	101,102,128
	'95-00														133,135
Caliber	'07-12	✓	✓	✓	9	✓	✓	9	✓	✓	9	✓	✓	9	101,102,121,128
Caliber SRT4	'07-12														NO FIT - SPOILER
Caliber SXT	'07-12														NO FIT - SPOILER
Caravan / Grand Caravan	'11-13	✓	✓	✓	11	✓	✓	11	✓	✓	11	✓	✓	11	101,102,121,128
	'08-10	✓	✓	✓	11	✓	✓	11	✓	✓	11	✓	✓	11	101,102,121,128
	'01-07	✓	✓	✓	10	✓	✓	10	✓	✓	10	✓	✓	10	101,102,121,128
	'96-00	✓			10	✓		10	✓		10	✓		10	101,102,121,139
	'90-95	✓			10	✓		10	✓		10	✓		10	101,102,121,139
Challenger	'09-13														NO FIT
Charger	'11-13	✓	✓	✓	7	✓	✓	7	✓	✓	7	✓	✓	7	101,102,128
	'06-10	✓	✓	✓	7	✓	✓	7	✓	✓	7	✓	✓	7	101,102,128
Colt 2DR	'93-95														133
	'84-92	✓			9	✓		9	✓		9	✓		9	101,102,140
Colt 4DR	'93-95	✓	✓	✓	6	✓	✓	6	✓	✓	6	✓	✓	6	101,102
Colt Hatchback	'90-92	✓	✓	✓	8	✓	✓	8	✓	✓	8	✓	✓	8	101,102
Colt Vista Wagon	'92-95	✓	✓	✓	9	✓	✓	9	✓	✓	9	✓	✓	9	101,105,121
	'88-91	✓	✓	✓	9	✓	✓	9	✓	✓	9	✓	✓	9	101,102,121
Dakota	'09-11														148
	'05-08														148
	'97-04														148
	'87-96														148
Dart 4DR	'13														CHECK FOR UPDATE
Daytona	'84-93	✓			6	✓		6	✓		6	✓		6	101,105,121,132,138
Durango	'11-13	✓	✓	✓	11	✓	✓	11	✓	✓	11	✓	✓	11	101,112,121,125,128
	'04-09	✓	✓	✓	11	✓	✓	11	✓	✓	11	✓	✓	11	101,112,121,125,128
	'98-03	✓	✓	✓	10	✓	✓	10	✓	✓	10	✓	✓	10	101,102,121,128
Dynasty	'88-93	✓	✓	✓	6	✓	✓	6	✓	✓	6	✓	✓	6	101,105
Intrepid	'98-04	✓	✓	✓	6	✓	✓	6	✓	✓	6	✓	✓	6	101,102,128
	'93-97	✓			6	✓		6	✓		6	✓		6	101,102,132
Journey	'13	✓	✓	✓	11	✓	✓	11	✓	✓	11	✓	✓	11	101,102,121,128
	'08-12	✓	✓	✓	11	✓	✓	11	✓	✓	11	✓	✓	11	101,102,121,128
Magnum	'05-08	✓	✓	✓	9	✓	✓	9	✓	✓	9	✓	✓	9	101,102,121,128
Neon 2DR	'95-99	✓			6	✓		6	✓		6	✓		6	101,102,132
Neon 4DR	'00-05	✓			7	✓		7	✓		7	✓		7	101,102,132
	'95-99	✓			6	✓		6	✓		6	✓		6	101,102,132
Nitro	'07-11	✓	✓	✓	11	✓	✓	11	✓	✓	11	✓	✓	11	101,102,121,128
Omni	'78-90	✓			7	✓		7	✓		7	✓		7	101,109,121,132
Ram 1500	'13														148
Ram 1500	'09-12														148
	'02-08														148
	'94-01														148
Ram 2500 / 3500	'10-13														148
	'03-09														148
	'02														148
	'94-01														148
Shadow 2DR	'87-94														135
Shadow 4DR	'87-94														135

THULE 2012 REAR MOUNTED FIT GUIDE

NOTE: If your vehicle is not listed below, it may be a NO FIT. For the most up to date information consult Thule Fit

DODGE continued

Vehicle make, model and year		9001 RACEWAY 2	9002 RACEWAY 3	9003 RACEWAY PLATFORM	FIT DIAL SETTING	9009 / 9009XT ARCHWAY 2	9010 / 9010XT ARCHWAY 3	FIT DIAL SETTING	9006 / 9006XT GATEWAY 2	9007 / 9007XT GATEWAY 3	FIT DIAL SETTING	910XT PASSAGE 2	911XT PASSAGE 3 933 VENTURE	FIT DIAL SETTING	
Spirit	'89-94	✓			6	✓		6	✓		6	✓		6	101,112,132
Stratus 2DR	'01-06	✓			6	✓		6	✓		6	✓		6	101,102,116,128,132
Stratus 4DR	'01-06	✓			6	✓		6	✓		6	✓		6	101,102,116,128,132
	'95-00	✓	✓	✓	6	✓	✓	6	✓	✓	6	✓	✓	6	101,106,125

FIAT

500 3DR	'11-13	✓	✓	✓	10	✓	✓	10	✓	✓	10	✓	✓	10	101,102,132,138
500 Abarth 3DR	'12-13	✓	✓	✓	10	✓	✓	10	✓	✓	10	✓	✓	10	101,102,132,138
500C 3DR Convertible	'12-13														NO FIT
500L 5DR	'13														CHECK FOR UPDATE

FORD

Aerostar	'85-97	✓			10	✓		10	✓		10	✓		10	101,102,128
Aspire 3DR	'95-97	✓			6	✓		6	✓		6	✓		6	101,102,132,138
Aspire 5DR	'95-97	✓			6	✓		6	✓		6	✓		6	101,102,132,138
Bronco (Full Size)	'87-96														148
Bronco II	'84-90														
C-Max	'13														CHECK FOR UPDATE
Contour	'95-00	✓			6	✓		6	✓		6	✓		6	101,103,118
Crown Victoria	'92-10	✓			6	✓		6	✓		6	✓		6	101,102,132
Crown Victoria, LTD	'88-91	✓	✓	✓	6	✓	✓	6	✓	✓	6	✓	✓	6	101,108
Edge	'11-13	✓	✓	✓	9	✓	✓	9	✓	✓	9	✓	✓	9	101,102,121,138
	'07-10	✓	✓	✓	9	✓	✓	9	✓	✓	9	✓	✓	9	101,102,121,138
Edge Sport	'11-13	✓	✓	✓	9	✓	✓	9	✓	✓	9	✓	✓	9	101,102,121,138
	'07-10	✓	✓	✓	9	✓	✓	9	✓	✓	9	✓	✓	9	101,102,121,138
Escape	'13	✓	✓	✓	10	✓	✓	10	✓	✓	10	✓	✓	10	101,102,121,128
	'08-12	✓	✓	✓	10	✓	✓	10	✓	✓	10	✓	✓	10	101,102,121,128
	'01-07	✓	✓	✓	10	✓	✓	10	✓	✓	10	✓	✓	10	101,102,121,128
Escort 3DR	'91-96	✓	✓	✓	7	✓	✓	7	✓	✓	7	✓	✓	7	101,103,138
Escort 4DR	'97-02	✓			7	✓		7	✓		7	✓		7	101,103,116,125,128,132
	'91-96	✓	✓	✓	7	✓	✓	7	✓	✓	7	✓	✓	7	101,103,138
Escort Hatchback	'87-90	✓	✓	✓	8	✓	✓	8	✓	✓	8	✓	✓	8	101,105,138
Escort Wagon	'91-99	✓	✓	✓	9	✓	✓	9	✓	✓	9	✓	✓	9	101,102,121,138
Escort GT 2DR	'88	✓	✓	✓	5	✓	✓	5	✓	✓	5	✓	✓	5	101,103,125,138
Excursion	'00-05	✓	✓	✓	10	✓	✓	10	✓	✓	10	✓	✓	10	101,102,121
Expedition	'05-13	✓	✓	✓	11	✓	✓	11	✓	✓	11	✓	✓	11	101,106,121,128
	'97-04	✓	✓	✓	11	✓	✓	11	✓	✓	11	✓	✓	11	101,106,121,128
Expedition EL	'05-13	✓	✓	✓	11	✓	✓	11	✓	✓	11	✓	✓	11	101,106,121,128
	'97-04	✓	✓	✓	11	✓	✓	11	✓	✓	11	✓	✓	11	101,106,121,128
Explorer 2DR	'96-00	✓	✓	✓	9	✓	✓	9	✓	✓	9	✓	✓	9	101,108,121,139
	'91-95	✓	✓	✓	9	✓	✓	9	✓	✓	9	✓	✓	9	101,102,121,138
Explorer 4DR	'11-13	✓	✓	✓	9	✓	✓	9	✓	✓	9	✓	✓	9	101,102,121,128
	'02-10	✓	✓	✓	10	✓	✓	10	✓	✓	10	✓	✓	10	101,102,121,138
	'96-01	✓	✓	✓	9	✓	✓	9	✓	✓	9	✓	✓	9	101,108,121,138
	'91-95	✓	✓	✓	9	✓	✓	9	✓	✓	9	✓	✓	9	101,102,121,138
Explorer Sport	'01-03	✓			9	✓		9	✓		9	✓		9	101,108,121,139
Explorer Sport Trac	'01-10														153
F-150	'09-13														148
	'04-08														148
	'97-03														148

THULE 2012 REAR MOUNTED FIT GUIDE

NOTE: If your vehicle is not listed below, it may be a NO FIT. For the most up to date information consult Thule Fit

DODGE continued

Vehicle make, model and year		9001 RACEWAY 2	9002 RACEWAY 3	9003 RACEWAY PLATFORM	FIT DIAL SETTING	9009 / 9009XT ARCHWAY 2	9010 / 9010XT ARCHWAY 3	FIT DIAL SETTING	9006 / 9006XT GATEWAY 2	9007 / 9007XT GATEWAY 3	FIT DIAL SETTING	910XT PASSAGE 2	911XT PASSAGE 3 933 VENTURE	FIT DIAL SETTING	
Spirit	'89-94	✓			6	✓		6	✓		6	✓		6	101,112,132
Stratus 2DR	'01-06	✓			6	✓		6	✓		6	✓		6	101,102,116,128,132
Stratus 4DR	'01-06	✓			6	✓		6	✓		6	✓		6	101,102,116,128,132
	'95-00	✓	✓	✓	6	✓	✓	6	✓	✓	6	✓	✓	6	101,106,125

FIAT

500 3DR	'11-13	✓	✓	✓	10	✓	✓	10	✓	✓	10	✓	✓	10	101,102,132,138
500 Abarth 3DR	'12-13	✓	✓	✓	10	✓	✓	10	✓	✓	10	✓	✓	10	101,102,132,138
500C 3DR Convertible	'12-13														NO FIT
500L 5DR	'13														CHECK FOR UPDATE

FORD

Aerostar	'85-97	✓			10	✓		10	✓		10	✓		10	101,102,128
Aspire 3DR	'95-97	✓			6	✓		6	✓		6	✓		6	101,102,132,138
Aspire 5DR	'95-97	✓			6	✓		6	✓		6	✓		6	101,102,132,138
Bronco (Full Size)	'87-96														148
Bronco II	'84-90														
C-Max	'13														CHECK FOR UPDATE
Contour	'95-00	✓			6	✓		6	✓		6	✓		6	101,103,118
Crown Victoria	'92-10	✓			6	✓		6	✓		6	✓		6	101,102,132
Crown Victoria, LTD	'88-91	✓	✓	✓	6	✓	✓	6	✓	✓	6	✓	✓	6	101,108
Edge	'11-13	✓	✓	✓	9	✓	✓	9	✓	✓	9	✓	✓	9	101,102,121,138
	'07-10	✓	✓	✓	9	✓	✓	9	✓	✓	9	✓	✓	9	101,102,121,138
Edge Sport	'11-13	✓	✓	✓	9	✓	✓	9	✓	✓	9	✓	✓	9	101,102,121,138
	'07-10	✓	✓	✓	9	✓	✓	9	✓	✓	9	✓	✓	9	101,102,121,138
Escape	'13	✓	✓	✓	10	✓	✓	10	✓	✓	10	✓	✓	10	101,102,121,128
	'08-12	✓	✓	✓	10	✓	✓	10	✓	✓	10	✓	✓	10	101,102,121,128
	'01-07	✓	✓	✓	10	✓	✓	10	✓	✓	10	✓	✓	10	101,102,121,128
Escort 3DR	'91-96	✓	✓	✓	7	✓	✓	7	✓	✓	7	✓	✓	7	101,103,138
Escort 4DR	'97-02	✓			7	✓		7	✓		7	✓		7	101,103,116,125,128,132
	'91-96	✓	✓	✓	7	✓	✓	7	✓	✓	7	✓	✓	7	101,103,138
Escort Hatchback	'87-90	✓	✓	✓	8	✓	✓	8	✓	✓	8	✓	✓	8	101,105,138
Escort Wagon	'91-99	✓	✓	✓	9	✓	✓	9	✓	✓	9	✓	✓	9	101,102,121,138
Escort GT 2DR	'88	✓	✓	✓	5	✓	✓	5	✓	✓	5	✓	✓	5	101,103,125,138
Excursion	'00-05	✓	✓	✓	10	✓	✓	10	✓	✓	10	✓	✓	10	101,102,121
Expedition	'05-13	✓	✓	✓	11	✓	✓	11	✓	✓	11	✓	✓	11	101,106,121,128
	'97-04	✓	✓	✓	11	✓	✓	11	✓	✓	11	✓	✓	11	101,106,121,128
Expedition EL	'05-13	✓	✓	✓	11	✓	✓	11	✓	✓	11	✓	✓	11	101,106,121,128
	'97-04	✓	✓	✓	11	✓	✓	11	✓	✓	11	✓	✓	11	101,106,121,128
Explorer 2DR	'96-00	✓	✓	✓	9	✓	✓	9	✓	✓	9	✓	✓	9	101,108,121,139
	'91-95	✓	✓	✓	9	✓	✓	9	✓	✓	9	✓	✓	9	101,102,121,138
Explorer 4DR	'11-13	✓	✓	✓	9	✓	✓	9	✓	✓	9	✓	✓	9	101,102,121,128
	'02-10	✓	✓	✓	10	✓	✓	10	✓	✓	10	✓	✓	10	101,102,121,138
	'96-01	✓	✓	✓	9	✓	✓	9	✓	✓	9	✓	✓	9	101,108,121,138
	'91-95	✓	✓	✓	9	✓	✓	9	✓	✓	9	✓	✓	9	101,102,121,138
Explorer Sport	'01-03	✓			9	✓		9	✓		9	✓		9	101,108,121,139
Explorer Sport Trac	'01-10														153
F-150	'09-13														148
	'04-08														148
	'97-03														148

THULE 2012 REAR MOUNTED FIT GUIDE

NOTE: If your vehicle is not listed below, it may be a NO FIT. For the most up to date information consult Thule Fit

FORD continued

Vehicle make, model and year		9001 RACEWAY 2	9002 RACEWAY 3	9003 RACEWAY PLATFORM	FIT DIAL SETTING	9009 / 9009XT ARCHWAY 2	9010 / 9010XT ARCHWAY 3	FIT DIAL SETTING	9006 / 9006XT GATEWAY 2	9007 / 9007XT GATEWAY 3	FIT DIAL SETTING	910XT PASSAGE 2	911XT PASSAGE 3 933 VENTURE	FIT DIAL SETTING	
F-250	'11-13														148
	'99-10														148
F-350	'11-13														148
	'99-10														148
Fiesta 4DR	'11-13	✓			7	✓		7	✓		7	✓		7	101,102,128
Fiesta 5DR	'11-13	✓			10	✓		10	✓		10	✓		10	101,102,128
Fiesta Sport 5DR	'12-13														NO FIT - SPOILER
Five Hundred	'05-07	✓	✓	✓	8	✓	✓	8	✓	✓	8	✓	✓	8	101,102,116,128
Flex	'08-13	✓	✓	✓	10	✓	✓	10	✓	✓	10	✓	✓	10	101,102,121,128
Focus 2DR	'08-11	✓	✓	✓	8	✓	✓	8	✓	✓	8	✓	✓	8	101,102,128
Focus 3DR	'00-07	✓	✓	✓	8	✓	✓	8	✓	✓	8	✓	✓	8	101,102,121,128
Focus 4DR	'12-13	✓	✓	✓	7	✓	✓	7	✓	✓	7	✓	✓	7	101,103,116,125,126,128
	'08-11	✓	✓	✓	7	✓	✓	7	✓	✓	7	✓	✓	7	101,103,116,125,126,128
	'00-07	✓	✓	✓	7	✓	✓	7	✓	✓	7	✓	✓	7	101,103,116,125,126,128
Focus 5DR	'12-13	✓	✓	✓	8	✓	✓	8	✓	✓	8	✓	✓	8	101,102,121,128
	'02-07	✓	✓	✓	8	✓	✓	8	✓	✓	8	✓	✓	8	101,102,121,128
Focus Wagon	'00-07	✓	✓	✓	10	✓	✓	10	✓	✓	10	✓	✓	10	101,102,121,128
Freestar	'04-07	✓	✓	✓	11	✓	✓	11	✓	✓	11	✓	✓	11	101,106,121,128
Freestyle	'05-07														137
Full Size Pickup	'79-96														148
Fusion	'13	✓			8	✓		8	✓		8	✓		8	101,102,128,132
	'06-12	✓			8	✓		8	✓		8	✓		8	101,102,116,128,132
Mustang	'10-13	✓	✓	✓	7	✓	✓	7	✓	✓	7	✓	✓	7	101,102,128
	'05-09	✓	✓	✓	7	✓	✓	7	✓	✓	7	✓	✓	7	101,102,128
	'99-04														135
	'95-98	✓	✓	✓	6	✓	✓	6	✓	✓	6	✓	✓	6	101,112
Probe	'93-97														133
	'91-92	✓	✓	✓	6	✓	✓	6	✓	✓	6	✓	✓	6	101,108,138
Ranger	'98-11														148
	'93-97														148
	'83-97														148
Taurus 4DR	'13	✓			8	✓		8	✓		8	✓		8	101,102,116,128,132
	'10-12	✓			8	✓		8	✓		8	✓		8	101,102,116,128,132
	'08-09	✓			8	✓		8	✓		8	✓		8	101,102,116,128,132
	'96-06	✓			6	✓		6	✓		6	✓		6	101,106,126,132
	'92-95														135
	'86-91	✓			6	✓		6	✓		6	✓		6	101,103,132,138
Taurus Wagon	'96-06	✓	✓	✓	9	✓	✓	9	✓	✓	9	✓	✓	9	101,106,121
	'86-95	✓	✓	✓	8	✓	✓	8	✓	✓	8	✓	✓	8	101,102,121,138
Taurus X	'08-09														137
Tempo 2DR	'84-94	✓			6	✓		6	✓		6	✓		6	101,108,132,138
Tempo 4DR	'84-94	✓			6	✓		6	✓		6	✓		6	101,108,132,138
Thunderbird	'02-05														135
	'89-97	✓			6	✓		6	✓		6	✓		6	101,103,132,138
	'86-87														135
Tracker	'89-97														
Transit Connect	'09-13														137
Windstar	'99-03	✓	✓	✓	10	✓	✓	10	✓	✓	10	✓	✓	10	101,102,121,128
	'98														135
	'95-97														135

THULE 2012 REAR MOUNTED FIT GUIDE

NOTE: If your vehicle is not listed below, it may be a NO FIT. For the most up to date information consult Thule Fit

FORD continued

Vehicle make, model and year		9001 RACEWAY 2	9002 RACEWAY 3	9003 RACEWAY PLATFORM	FIT DIAL SETTING	9009 / 9009XT ARCHWAY 2	9010 / 9010XT ARCHWAY 3	FIT DIAL SETTING	9006 / 9006XT GATEWAY 2	9007 / 9007XT GATEWAY 3	FIT DIAL SETTING	910XT PASSAGE 2	911XT PASSAGE 3 933 VENTURE	FIT DIAL SETTING	
Vans (E-Series)	'79-13														NO FIT
ZX2	'98-03	✓			7	✓		7	✓		7	✓		7	101,103,116,125,128,132

GMC

Acadia	'07-13	✓	✓	✓	9	✓	✓	9	✓	✓	9	✓	✓	9	101,102,121,128
Canyon	'04-12														148
Classic Sierra	'88-00														148
Denali	01-04	✓			10	✓		10	✓		10	✓		10	101,106,121,132,138
Denali XL	'00-04	✓			10	✓		10	✓		10	✓		10	101,106,121,132,138
Envoy	'98-01														137
Envoy/Denali 4DR	'02-09														135,137
Envoy XL	'02-06														135,137
Envoy XUV	'04-05														135,137
Full Size Jimmy	'79-91														148
Full Size Pickup	'79-87														148
Jimmy 2DR	'95-01														134,135
Jimmy 4DR	'95-01														134,135
S-15 Jimmy	'92-94														134
S-15	'85-93														135
Safari Van	'90-05														137
Sierra	'07-13														148
	'99-06														148
Sonoma	'94-04														148
Suburban	'92-99	✓			10	✓		10	✓		10	✓		10	101,106,128,132
Terrain	'10-13	✓	✓	✓	9	✓	✓	9	✓	✓	9	✓	✓	9	101,112,121,138
Terrain Denali	'12-13	✓	✓	✓	9	✓	✓	9	✓	✓	9	✓	✓	9	101,112,121,138
Yukon	'07-13														134
	'00-06	✓			10	✓		10	✓		10	✓		10	101,106,121,132,138
	'99	✓			10	✓		10	✓		10	✓		10	101,106,128,132
Yukon XL	'07-13														134
	'00-06	✓			10	✓		10	✓		10	✓		10	101,106,121,132,138

HONDA

Accord 2DR	'13	✓	✓	✓	7	✓	✓	7	✓	✓	7	✓	✓	7	101,102,128
	'08-12	✓	✓	✓	7	✓	✓	7	✓	✓	7	✓	✓	7	101,102,128
	'03-07	✓	✓	✓	7	✓	✓	7	✓	✓	7	✓	✓	7	101,102,147
	'98-02	✓			6	✓		6	✓		6	✓		6	101,110,128,132
	'94-97	✓	✓	✓	5	✓	✓	5	✓	✓	5	✓	✓	5	101,102,138
	'90-93	✓			6	✓		6	✓		6	✓		6	101,102,132
	'86-89	✓	✓	✓	6	✓	✓	6	✓	✓	6	✓	✓	6	101,103,138
Accord 4DR	'13	✓	✓	✓	8	✓	✓	8	✓	✓	8	✓	✓	8	101,102,128
	'08-12	✓	✓	✓	8	✓	✓	8	✓	✓	8	✓	✓	8	101,102,128
	'03-07	✓	✓	✓	8	✓	✓	8	✓	✓	8	✓	✓	8	101,102,128
	'98-02	✓	✓	✓	7	✓	✓	7	✓	✓	7	✓	✓	7	101,102,128
	'94-97	✓	✓	✓	5	✓	✓	5	✓	✓	5	✓	✓	5	101,102,138
	'90-93	✓			6	✓		6	✓		6	✓		6	101,102,132
	'86-89	✓	✓	✓	6	✓	✓	6	✓	✓	6	✓	✓	6	101,103,138
Accord Hatchback	'86-89														134
Accord Wagon	'91-93	✓	✓	✓	8	✓	✓	8	✓	✓	8	✓	✓	8	101,102,121,138
Civic 2DR	'12-13	✓	✓	✓	7	✓	✓	7	✓	✓	7	✓	✓	7	101,102,138

THULE 2012 REAR MOUNTED FIT GUIDE

NOTE: If your vehicle is not listed below, it may be a NO FIT. For the most up to date information consult Thule Fit

HONDA continued

Vehicle make, model and year		9001 RACEWAY 2	9002 RACEWAY 3	9003 RACEWAY PLATFORM	FIT DIAL SETTING	9009 / 9009XT ARCHWAY 2	9010 / 9010XT ARCHWAY 3	FIT DIAL SETTING	9006 / 9006XT GATEWAY 2	9007 / 9007XT GATEWAY 3	FIT DIAL SETTING	910XT PASSAGE 2	911XT PASSAGE 3 933 VENTURE	FIT DIAL SETTING	
Civic 2DR	'06-11	✓	✓	✓	7	✓	✓	7	✓	✓	7	✓	✓	7	101,102,138
	'01-05	✓	✓	✓	6	✓	✓	6	✓	✓	6	✓	✓	6	101,102,128
	'96-00	✓			6	✓		6	✓		6	✓		6	101,102,132
	'92-95	✓			6	✓		6	✓		6	✓		6	101,102,132
Civic Si 3DR	'02-05	✓	✓	✓	8	✓	✓	8	✓	✓	8	✓	✓	8	101,102,121,128
Civic 3DR	'96-00														135
	'92-95	✓			8	✓		8	✓		8	✓		8	101,102,121,132,138
Civic 4DR	'12-13	✓	✓	✓	7	✓	✓	7	✓	✓	7	✓	✓	7	101,102,128
	'06-11	✓	✓	✓	7	✓	✓	7	✓	✓	7	✓	✓	7	101,102,128
	'01-05	✓	✓	✓	6	✓	✓	6	✓	✓	6	✓	✓	6	101,102,128
	'96-00	✓			6	✓		6	✓		6	✓		6	101,102,132
	'92-95	✓			6	✓		6	✓		6	✓		6	101,102,132
	'86-91	✓	✓	✓	6	✓	✓	6	✓	✓	6	✓	✓	6	101,102
Civic Wagon	'88-91	✓	✓	✓	9	✓	✓	9	✓	✓	9	✓	✓	9	101,102
Crosstour	'10-13	✓	✓	✓	8	✓	✓	8	✓	✓	8	✓	✓	8	101,102,121,138
CRV	'12-13														133
	'07-11														133
	'02-06														
	'97-01														
CRX	'88-91														134
CRZ	'11-13	✓			7	✓		7	✓		7	✓		7	101,102,121,128
del Sol	'93-97	✓			5	✓		5	✓		5	✓		5	101,110,125,126,132,138
Element	'03-11	✓	✓	✓	11	✓	✓	11	✓	✓	11	✓	✓	11	101,121,128,147
Element SC	'03-11	✓	✓	✓	11	✓	✓	11	✓	✓	11	✓	✓	11	101,121,128,147
FCX Clarity 4DR	'09-13														CHECK FOR UPDATE
Fit	'09-13	✓	✓	✓	10	✓	✓	10	✓	✓	10	✓	✓	10	101,102,121,128
	'07-08	✓	✓	✓	10	✓	✓	10	✓	✓	10	✓	✓	10	101,102,121,128
Fit Sport	'09-13														NO FIT - SPOILER
	'07-08														NO FIT - SPOILER
Insight	'10-13	✓	✓	✓	8	✓	✓	8	✓	✓	8	✓	✓	8	101,102,121,138
	'00-06														134,135
Odyssey	'11-13														NO FIT - SPOILER
	'05-10														146
	'95-04														135
Passport	'98-02	✓			8	✓		8	✓		8	✓		8	101,102,121,132,138,144
	'94-97														134
Pilot	'09-13														133
	'03-08														133
Prelude	'97-01														135
	'92-96	✓			4	✓		4	✓		4	✓		4	101,102,132,138
	'88-91	✓			6	✓		6	✓		6	✓		6	101,103,125,132
	'83-87	✓	✓	✓	6	✓	✓	6	✓	✓	6	✓	✓	6	101,103,125
Ridgeline	'06-13														153
Ridgeline Sport	'12-13														153
S2000	'00-09														135

HUMMER

H1/Hummer	'93-08														NO FIT
H2/H2 SUT	'03-10														
H3	'05-10														

THULE 2012 REAR MOUNTED FIT GUIDE

NOTE: If your vehicle is not listed below, it may be a NO FIT. For the most up to date information consult Thule Fit

Vehicle make, model and year		9001 RACEWAY 2	9002 RACEWAY 3	9003 RACEWAY PLATFORM	FIT DIAL SETTING	9009 / 9009XT ARCHWAY 2	9010 / 9010XT ARCHWAY 3	FIT DIAL SETTING	9006 / 9006XT GATEWAY 2	9007 / 9007XT GATEWAY 3	FIT DIAL SETTING	910XT PASSAGE 2	911XT PASSAGE 3 933 VENTURE	FIT DIAL SETTING	
HUMMER continued															
H3T	'09-10														153
HYUNDAI															
Accent 3DR	'07-11	✓	✓	✓	8	✓	✓	8	✓	✓	8	✓	✓	8	101,102,128
	'00-06	✓	✓	✓	8	✓	✓	8	✓	✓	8	✓	✓	8	101,102,128
	'95-99	✓			7	✓		7	✓		7	✓		7	101,108,132,138
Accent 4DR	'12-13	✓	✓	✓	7	✓	✓	7	✓	✓	7	✓	✓	7	101,102,128
	'06-11	✓	✓	✓	7	✓	✓	7	✓	✓	7	✓	✓	7	101,102,128
	'00-05	✓	✓	✓	7	✓	✓	7	✓	✓	7	✓	✓	7	101,102,128
	'95-99	✓			6	✓		6	✓		6	✓		6	101,108,126,132,138
Accent 5DR	'12-13	✓	✓	✓	8	✓	✓	8	✓	✓	8	✓	✓	8	101,102,121,128
Azera	'12-13	✓	✓	✓	7	✓	✓	7	✓	✓	7	✓	✓	7	101,102,128
	'10-11	✓	✓	✓	7	✓	✓	7	✓	✓	7	✓	✓	7	101,102,128
	'06-09	✓	✓	✓	7	✓	✓	7	✓	✓	7	✓	✓	7	101,102,128
Elantra 2DR	'13														CHECK FOR UPDATE
Elantra 4DR	'11-13	✓	✓	✓	7	✓	✓	7	✓	✓	7	✓	✓	7	101,102,128
	'07-10	✓	✓	✓	8	✓	✓	8	✓	✓	8	✓	✓	8	101,102,128
	'01-06	✓	✓	✓	7	✓	✓	7	✓	✓	7	✓	✓	7	101,102,128
	'99-00	✓	✓	✓	7	✓	✓	7	✓	✓	7	✓	✓	7	101,102,126,128
	'92-98														133
Elantra 5DR	'01-06	✓	✓	✓	7	✓	✓	7	✓	✓	7	✓	✓	7	101,102,121,128
Elantra GT 5DR	'13	✓	✓	✓	8	✓	✓	8	✓	✓	8	✓	✓	8	101,102,121,128
Elantra Touring	'09-12	✓	✓	✓	7	✓	✓	7	✓	✓	7	✓	✓	7	101,102,121,138
	'01-05														134,137
	'97-00														134
Entourage	'07-10	✓	✓	✓	10	✓	✓	10	✓	✓	10	✓	✓	10	101,102,121,128
Equus	'11-13														CHECK FOR UPDATE
Excel 2DR	'90-94	✓			7	✓		7	✓		7	✓		7	101,108,132,138
Excel 4DR	'90-94	✓	✓	✓	6	✓	✓	6	✓	✓	6	✓	✓	6	101,102,138
	'86-89	✓			8	✓		8	✓		8	✓		8	101,102,121,132
Excel 5DR	'86-89	✓			8	✓		8	✓		8	✓		8	101,102,121,132,138
Genesis 2DR	'09-13														146
Genesis 4DR	'09-13	✓	✓	✓	8	✓	✓	8	✓	✓	8	✓	✓	8	101,102,128
Santa Fe	'13	✓	✓	✓	10	✓	✓	10	✓	✓	10	✓	✓	10	101,102,121,128
	'07-12	✓	✓	✓	10	✓	✓	10	✓	✓	10	✓	✓	10	101,102,121,128
	'01-06	✓	✓	✓	9	✓	✓	9	✓	✓	9	✓	✓	9	101,102,121,138
Santa Fe Sport	'13	✓	✓	✓	10	✓	✓	10	✓	✓	10	✓	✓	10	101,102,121,128
S Coupe	'91-96	✓	✓	✓	5	✓	✓	5	✓	✓	5	✓	✓	5	101,102,138
Sonata	'11-13	✓	✓	✓	7	✓	✓	7	✓	✓	7	✓	✓	7	101,102,128
	'06-10	✓	✓	✓	7	✓	✓	7	✓	✓	7	✓	✓	7	101,102,128
	'02-05	✓	✓	✓	7	✓	✓	7	✓	✓	7	✓	✓	7	101,102,128
	'99-01	✓			7	✓		7	✓		7	✓		7	101,102,126,128,132
	'95-98	✓			6	✓		6	✓		6	✓		6	101,108,126,132,138
	'89-94														133
Tiburon	'02-08	✓	✓	✓	7	✓	✓	7	✓	✓	7	✓	✓	7	101,102,121,128
	'97-01														133
Tuscon	'10-13	✓	✓	✓	10	✓	✓	10	✓	✓	10	✓	✓	10	101,102,119,121
	'05-09	✓	✓	✓	10	✓	✓	10	✓	✓	10	✓	✓	10	101,102,121,128
Velostar 3DR	'12-13														137
Veracruz	'07-12														134

THULE 2012 REAR MOUNTED FIT GUIDE

NOTE: If your vehicle is not listed below, it may be a NO FIT. For the most up to date information consult Thule Fit

HYUNDAI continued

Vehicle make, model and year		9001 RACEWAY 2	9002 RACEWAY 3	9003 RACEWAY PLATFORM	FIT DIAL SETTING	9009 / 9009XT ARCHWAY 2	9010 / 9010XT ARCHWAY 3	FIT DIAL SETTING	9006 / 9006XT GATEWAY 2	9007 / 9007XT GATEWAY 3	FIT DIAL SETTING	910XT PASSAGE 2	911XT PASSAGE 3 933 VENTURE	FIT DIAL SETTING	
XG300/350	'01-05	✓	✓	✓	7	✓	✓	7	✓	✓	7	✓	✓	7	101,102,128

INFINITI

EX35	'08-13	✓	✓	✓	10	✓	✓	10	✓	✓	10	✓	✓	10	101,102,121,128,151
EX37	'13	✓	✓	✓	10	✓	✓	10	✓	✓	10	✓	✓	10	101,102,121,128,151
FX35	'07-13	✓	✓	✓	10	✓	✓	10	✓	✓	10	✓	✓	10	101,102,121,141
FX45	'03-08	✓	✓	✓	10	✓	✓	10	✓	✓	10	✓	✓	10	101,102,121,141
FX50	'09-13	✓	✓	✓	10	✓	✓	10	✓	✓	10	✓	✓	10	101,102,121,141
G20	'99-02	✓	✓	✓	7	✓	✓	7	✓	✓	7	✓	✓	7	101,102,116,128
	'91-96	✓			6	✓		6	✓		6	✓		6	101,103,132,138
G25 4DR	'11-12	✓			7	✓		7	✓		7	✓		7	101,102,116,128
G35 2DR	'03-08					✓		7	✓		7	✓		7	101,102,138
G35 4DR	'07-08	✓			7	✓		7	✓		7	✓		7	101,102,116,128
	'03-06	✓			7	✓		7	✓		7	✓		7	101,102,116,128,132
G37 2DR	'09-12					✓		7	✓		7	✓		7	101,102,138
G37 4DR	'09-13	✓			7	✓		7	✓		7	✓		7	101,102,116,128
G37 Convertible	'09-12														NO FIT
I30	'00-01	✓	✓	✓	6	✓	✓	6	✓	✓	6	✓	✓	6	101,103,125,128
	'95-99	✓	✓	✓	6	✓	✓	6	✓	✓	6	✓	✓	6	101,110,128
I35	'02-04	✓	✓	✓	6	✓	✓	6	✓	✓	6	✓	✓	6	101,103,125,128
J30	'92-98	✓	✓	✓	6	✓	✓	6	✓	✓	6	✓	✓	6	101,103,126
JX	'12-13	✓	✓	✓	11	✓	✓	11	✓	✓	11	✓	✓	11	101,102,121,128
M	'11-13	✓	✓	✓	8	✓	✓	8	✓	✓	8	✓	✓	8	101,102,128
M30	'90-92														134
M35	'06-10	✓	✓	✓	8	✓	✓	8	✓	✓	8	✓	✓	8	101,102,128
M45	'06-10	✓	✓	✓	8	✓	✓	8	✓	✓	8	✓	✓	8	101,103,128
	'03-04														135
Q45	'02-07														133
	'97-01														133
	'90-95	✓	✓	✓	6	✓	✓	6	✓	✓	6	✓	✓	6	101,103
QX4 w/o spare tire	'97-03	✓	✓	✓	10	✓	✓	10	✓	✓	10	✓	✓	10	101,102,121,128
QX56	'11-13	✓	✓	✓	11	✓	✓	11	✓	✓	11	✓	✓	11	101,112,121,128
	'04-10	✓	✓	✓	11	✓	✓	11	✓	✓	11	✓	✓	11	101,112,121,128

ISUZU

Amigo	'99-01														
Ascender	'03-10														135,137
Axiom	'02-04	✓	✓	✓	10	✓	✓	10	✓	✓	10	✓	✓	10	101,102,121,128
Hombre	'96-01														135
I-280/I-290	'06-09														153
I-350/I-370	'06-09														153
I-Mark 2DR	'86-89	✓			7	✓		7	✓		7	✓		7	101,102,132,140
I-Mark 4DR	'86-89	✓			7	✓		7	✓		7	✓		7	101,102,132,140
Impulse	'90-93														134
Oasis	'96-99														134
Truck	'81-87														148
Truck w/ Space Cap	'89-94														148
Truck w/ Standard Cab	'88-95														148
Rodeo	'98-04	✓			8	✓		8	✓		8	✓		8	101,102,121,132,138,,144
	'91-97														

THULE 2012 REAR MOUNTED FIT GUIDE

NOTE: If your vehicle is not listed below, it may be a NO FIT. For the most up to date information consult Thule Fit

ISUZU continued

Vehicle make, model and year		9001 RACEWAY 2	9002 RACEWAY 3	9003 RACEWAY PLATFORM	FIT DIAL SETTING	9009 / 9009XT ARCHWAY 2	9010 / 9010XT ARCHWAY 3	FIT DIAL SETTING	9006 / 9006XT GATEWAY 2	9007 / 9007XT GATEWAY 3	FIT DIAL SETTING	910XT PASSAGE 2	911XT PASSAGE 3 933 VENTURE	FIT DIAL SETTING	
Stylus	'91-93	✓			6	✓		6	✓		6	✓		6	101,102,132
Trooper	'92-02														144, 149
	'84-91														

JAGUAR

F-Type Convertible	'13														135
S-Type	'00-08	✓	✓	✓	7	✓	✓	7	✓	✓	7	✓	✓	7	101,102,128
VDP Vanden Plas	'96-02	✓	✓	✓	6	✓	✓	6	✓	✓	6	✓	✓	6	101,128,130
XF 4DR	'12-13														135
	'09-11														135
XFR 4DR	'12-13														135
	'10-11														135
XJ12 4DR	'94	✓	✓	✓	6	✓	✓	6	✓	✓	6	✓	✓	6	101,103
XJ 4DR	'10-13														135
XJR 4DR	'10-13														135
XJ6 4DR	'96-97	✓	✓	✓	6	✓	✓	6	✓	✓	6	✓	✓	6	101,128,130
	'89-95	✓	✓	✓	6	✓	✓	6	✓	✓	6	✓	✓	6	101,103
XJ8	'97-09	✓	✓	✓	6	✓	✓	6	✓	✓	6	✓	✓	6	101,128,130
XJS 2DR	'92-96	✓	✓	✓	6	✓	✓	6	✓	✓	6	✓	✓	6	101,103
XK 2DR	'12-13														135
	'09-11														135
XKR 2DR	'12-13														135
	'10-11														135
XK8 2DR	'97-11														135
X-Type 4DR	'02-08	✓	✓	✓	7	✓	✓	7	✓	✓	7	✓	✓	7	101,102,128
X-Type Wagon	'05-08	✓	✓	✓	7	✓	✓	7	✓	✓	7	✓	✓	7	101,102,128

JEEP

Cherokee	'91-01	✓	✓	✓	8	✓	✓	8	✓	✓	8	✓	✓	8	101,109,121,139
CJ-7	'79-95														
Commanche	'86-94														148
Commander	'06-10	✓	✓	✓	11	✓	✓	11	✓	✓	11	✓	✓	11	101,102,121,128
Compass	'11-13	✓	✓	✓	9	✓	✓	9	✓	✓	9	✓	✓	9	101,102,121,128
	'07-10	✓	✓	✓	9	✓	✓	9	✓	✓	9	✓	✓	9	101,102,121,128
Grand Cherokee	'11-13	✓	✓		9	✓	✓	9	✓	✓	9	✓	✓	9	101,102,121,128
	'05-10	✓	✓		9	✓	✓	9	✓	✓	9	✓	✓	9	101,105,121,128
	'99-04	✓			10	✓		10	✓		10	✓		10	101,102,121,132,138
	'93-98	✓	✓	✓	9	✓	✓	9	✓	✓	9	✓	✓	9	101,105,121,138
Grand Wagoneer	'84-92														137
Liberty	'08-12	✓	✓	✓	11	✓	✓	11	✓	✓	11	✓	✓	11	101,102,121,128
	'02-07														
Liberty Renegade	'05-07														
Patriot	'07-13	✓	✓	✓	11	✓	✓	11	✓	✓	11	✓	✓	11	101,102,121,128
Wrangler	'87-13														
Wrangler Unlimited	'04-13														

KIA

Amanti	'04-09	✓	✓	✓	7	✓	✓	7	✓	✓	7	✓	✓	7	101,102,128
Borrego	'09-12														NO FIT
Cadenza 4DR	'12-14														CHECK FOR UPDATE

THULE 2012 REAR MOUNTED FIT GUIDE

NOTE: If your vehicle is not listed below, it may be a NO FIT. For the most up to date information consult Thule Fit

KIA continued

Vehicle make, model and year		9001 RACEWAY 2	9002 RACEWAY 3	9003 RACEWAY PLATFORM	FIT DIAL SETTING	9009 / 9009XT ARCHWAY 2	9010 / 9010XT ARCHWAY 3	FIT DIAL SETTING	9006 / 9006XT GATEWAY 2	9007 / 9007XT GATEWAY 3	FIT DIAL SETTING	910XT PASSAGE 2	911XT PASSAGE 3 933 VENTURE	FIT DIAL SETTING	
Carens	'07-12	✓	✓	✓	11	✓	✓	11	✓	✓	11	✓	✓	11	101,102,121,128
Credos	'98-99														135
Forte 2DR	'10-13	✓	✓	✓	8	✓	✓	8	✓	✓	8	✓	✓	8	101,102,128
Forte 4DR	'10-13	✓	✓	✓	8	✓	✓	8	✓	✓	8	✓	✓	8	101,102,128
Forte 5DR	'11-13	✓	✓	✓	10	✓	✓	10	✓	✓	10	✓	✓	10	101,102,121,138
Optima 4DR	'11-13	✓	✓	✓	7	✓	✓	7	✓	✓	7	✓	✓	7	101,102,128
	'07-10	✓	✓	✓	7	✓	✓	7	✓	✓	7	✓	✓	7	101,102,128
	'01-06	✓	✓	✓	7	✓	✓	7	✓	✓	7	✓	✓	7	101,102,128
Rio 4DR	'12-13	✓	✓	✓	8	✓	✓	8	✓	✓	8	✓	✓	8	101,102,128
	'06-11	✓	✓	✓	8	✓	✓	8	✓	✓	8	✓	✓	8	101,102,128
	'01-05	✓	✓	✓	7	✓	✓	7	✓	✓	7	✓	✓	7	101,102,128
Rio5 5DR	'12-13	✓	✓	✓	8	✓	✓	8	✓	✓	8	✓	✓	8	101,102,121,128
Rio Cinco Wagon	'06-11	✓	✓	✓	9	✓	✓	9	✓	✓	9	✓	✓	9	101,102,121,128
	'02-05	✓	✓	✓	9	✓	✓	9	✓	✓	9	✓	✓	9	101,102,121,128
Rondo	'07-12	✓	✓	✓	11	✓	✓	11	✓	✓	11	✓	✓	11	101,102,121,128
Rondo EX	'09-12	✓	✓	✓	11	✓	✓	11	✓	✓	11	✓	✓	11	101,102,121,128
Sedona	'11-12	✓	✓	✓	11	✓	✓	11	✓	✓	11	✓	✓	11	101,102,121
	'06-10	✓	✓	✓	11	✓	✓	11	✓	✓	11	✓	✓	11	101,102,121
	'02-05	✓	✓	✓	10	✓	✓	10	✓	✓	10	✓	✓	10	101,102,121,138
Sephia	'98-01	✓			7	✓		7	✓		7	✓		7	101,102,128,132
	'94-97														135
Soul	'10-13	✓	✓	✓	11	✓	✓	11	✓	✓	11	✓	✓	11	101,102,121,128
Sorento	'11-13	✓	✓	✓	10	✓	✓	10	✓	✓	10	✓	✓	10	101,103,121,125,128
	'03-09	✓	✓	✓	10	✓	✓	10	✓	✓	10	✓	✓	10	101,103,121,125,128
Spectra 4DR	'07-09	✓	✓	✓	8	✓	✓	8	✓	✓	8	✓	✓	8	101,102,128
	'04.5-06														137
	'00-04.5	✓			6	✓		6	✓		6	✓		6	101,102,128,132
Spectra5	'05-09														134
Sportage	'11-13	✓	✓	✓	10	✓	✓	10	✓	✓	10	✓	✓	10	101,102,119,121
	'05-10	✓	✓	✓	10	✓	✓	10	✓	✓	10	✓	✓	10	101,102,121,128
	'95-02														

LAND ROVER

Discovery	'94-98														
Discovery II	'98-04														
Evoque Coupe 3DR	'12-13														CHECK FOR UPDATE
Evoque 5DR	'12-13														CHECK FOR UPDATE
Freelander	'02-05														
LR2	'07-13	✓	✓	✓	10	✓	✓	10	✓	✓	10	✓	✓	10	101,102,121,128
LR3	'05-09	✓	✓	✓	11	✓	✓	11	✓	✓	11	✓	✓	11	101,128,147
LR4	'10-13	✓	✓	✓	11	✓	✓	11	✓	✓	11	✓	✓	11	101,128,147
Range Rover	'13														137
	'03-12														137
	'87-02														137
Range Rover Sport	'13														137
	'03-12														137

LEXUS

CT200H 5DR	'12-13	✓	✓	✓	8	✓	✓	8	✓	✓	8	✓	✓	8	101,102,121,128
CT200H F Sport 5DR	'12-13	✓	✓	✓	8	✓	✓	8	✓	✓	8	✓	✓	8	101,102,121,128

THULE 2012 REAR MOUNTED FIT GUIDE

NOTE: If your vehicle is not listed below, it may be a NO FIT. For the most up to date information consult Thule Fit

LEXUS continued

Vehicle make, model and year		9001 RACEWAY 2	9002 RACEWAY 3	9003 RACEWAY PLATFORM	FIT DIAL SETTING	9009 / 9009XT ARCHWAY 2	9010 / 9010XT ARCHWAY 3	FIT DIAL SETTING	9006 / 9006XT GATEWAY 2	9007 / 9007XT GATEWAY 3	FIT DIAL SETTING	910XT PASSAGE 2	911XT PASSAGE 3 933 VENTURE	FIT DIAL SETTING	
ES250	'90-91														135
ES300	'02-03	✓	✓	✓	7	✓	✓	7	✓	✓	7	✓	✓	7	101,102,128
	'97-01	✓			6	✓		6	✓		6	✓		6	101,103,125,126,132,138
	'92-96	✓	✓	✓	6	✓	✓	6	✓	✓	6	✓	✓	6	101,103
ES330	'04-06	✓	✓	✓	7	✓	✓	7	✓	✓	7	✓	✓	7	101,102,128
ES350	'07-13	✓	✓	✓	7	✓	✓	7	✓	✓	7	✓	✓	7	101,102,128
GS	'13	✓	✓	✓	7	✓	✓	7	✓	✓	7	✓	✓	7	101,102,128
GS F	'13	✓	✓	✓	7	✓	✓	7	✓	✓	7	✓	✓	7	101,102,128
GS300	'06-08	✓	✓	✓	7	✓	✓	7	✓	✓	7	✓	✓	7	101,102,128
	'02-05	✓	✓	✓	6	✓	✓	6	✓	✓	6	✓	✓	6	101,103,138
	'98-01	✓	✓	✓	6	✓	✓	6	✓	✓	6	✓	✓	6	101,103,138
	'93-97														133
GS350	'06-11	✓	✓	✓	7	✓	✓	7	✓	✓	7	✓	✓	7	101,102,128
GS400	'98-01	✓	✓	✓	6	✓	✓	6	✓	✓	6	✓	✓	6	101,103,138
GS430	'06-11	✓	✓	✓	7	✓	✓	7	✓	✓	7	✓	✓	7	101,102,128
	'02-05	✓	✓	✓	6	✓	✓	6	✓	✓	6	✓	✓	6	101,103,138
GS450h	'07-11	✓	✓	✓	7	✓	✓	7	✓	✓	7	✓	✓	7	101,102,128
GS460	'02-11	✓	✓	✓	7	✓	✓	7	✓	✓	7	✓	✓	7	101,102,128
GX460	'09-13	✓	✓	✓	11	✓	✓	11	✓	✓	11	✓	✓	11	101,102,121,128
GX470	'03-13	✓	✓	✓	11	✓	✓	11	✓	✓	11	✓	✓	11	101,102,121,128
HS250H	'10-12	✓	✓	✓	7	✓	✓	7	✓	✓	7	✓	✓	7	101,102,128
IS300 4DR	'01-05	✓	✓	✓	6	✓	✓	6	✓	✓	6	✓	✓	6	101,102,128
IS300 SportCross	'02-05														134,137
IS 250	'06-13	✓	✓	✓	7	✓	✓	7	✓	✓	7	✓	✓	7	101,102,128
IS 350	'06-13	✓	✓	✓	7	✓	✓	7	✓	✓	7	✓	✓	7	101,102,128
IS F	'06-13	✓	✓	✓	7	✓	✓	7	✓	✓	7	✓	✓	7	101,102,128
LS400	'95-00	✓	✓	✓	7	✓	✓	7	✓	✓	7	✓	✓	7	101,102,128
	'90-94														133
LS430	'01-06	✓	✓	✓	7	✓	✓	7	✓	✓	7	✓	✓	7	101,102,128
LS460	'06-12	✓	✓	✓	7	✓	✓	7	✓	✓	7	✓	✓	7	101,102,128
LX450	'96-97														135
LX470	'98-07	✓			10	✓		10	✓		10	✓		10	101,103,121,125,141
LX570	'08-13	✓			10	✓		10	✓		10	✓		10	101,103,121,125,141
RX300	'98-03	✓			9	✓		9	✓		9	✓		9	101,103,121,127,132,138
RX330	'04-06	✓			9	✓		9	✓		9	✓		9	101,103,121,132,138
RX350	'05-13	✓			9	✓		9	✓		9	✓		9	101,103,121,132,138
RX400H	'06-13	✓			9	✓		9	✓		9	✓		9	101,103,121,132,138
RX450H	'10-13	✓			9	✓		9	✓		9	✓		9	101,103,121,132,138
SC300	'98-01														135
SC400	'98-01														135
	'91-93														135
SC430	'02-11														135

LINCOLN

Aviator	'03-05	✓	✓	✓	11	✓	✓	11	✓	✓	11	✓	✓	11	101,106,121,128
Continental	'98-02	✓	✓	✓	6	✓	✓	6	✓	✓	6	✓	✓	6	101,108
	'97-97	✓			7	✓		7	✓		7	✓		7	101,106,132,138
	'90-96	✓			6	✓		6	✓		6	✓		6	101,103,132,138
LS	'00-06	✓	✓	✓	7	✓	✓	7	✓	✓	7	✓	✓	7	101,103,128
Mark LT	'06-08														148

THULE 2012 REAR MOUNTED FIT GUIDE

NOTE: If your vehicle is not listed below, it may be a NO FIT. For the most up to date information consult Thule Fit

LINCOLN continued

Vehicle make, model and year		9001 RACEWAY 2	9002 RACEWAY 3	9003 RACEWAY PLATFORM	FIT DIAL SETTING	9009 / 9009XT ARCHWAY 2	9010 / 9010XT ARCHWAY 3	FIT DIAL SETTING	9006 / 9006XT GATEWAY 2	9007 / 9007XT GATEWAY 3	FIT DIAL SETTING	910XT PASSAGE 2	911XT PASSAGE 3 933 VENTURE	FIT DIAL SETTING	
Mark VII	'84-92	✓			7	✓		7	✓		7	✓		7	101,109,117,132,138
Mark VIII	'96-99	✓	✓	✓	6	✓	✓	6	✓	✓	6	✓	✓	6	101,103,117,125,128
	'93-95	✓	✓	✓	5	✓	✓	5	✓	✓	5	✓	✓	5	101,103,139
MKS	'09-13	✓			7	✓		7	✓		7	✓		7	101,102,116,128,132
MKT	'10-13														NO FIT
MKX	'11-13	✓	✓	✓	9	✓	✓	9	✓	✓	9	✓	✓	9	101,102,121,138
	'07-10	✓	✓	✓	9	✓	✓	9	✓	✓	9	✓	✓	9	101,102,121,138
MKZ	'13	✓			8	✓		8	✓		8	✓		8	101,102,128,132
	'07-12	✓			8	✓		8	✓		8	✓		8	101,102,116,128,132
Navigator	'98-13	✓	✓	✓	11	✓	✓	11	✓	✓	11	✓	✓	11	101,106,121,128
Town Car	'98-11	✓	✓	✓	6	✓	✓	6	✓	✓	6	✓	✓	6	101,102,128
Zephyr	'06	✓			8	✓		8	✓		8	✓		8	101,102,116,128,132

MAZADA

2 5DR	'11-13	✓			10	✓		10	✓		10	✓		10	101,102,128
3 4DR	'04-13	✓			6	✓		6	✓		6	✓		6	101,102,128,132
3 5DR	'04-13	✓	✓	✓	9	✓	✓	9	✓	✓	9	✓	✓	9	101,102,128
323 3DR	'90-94	✓	✓	✓	7	✓	✓	7	✓	✓	7	✓	✓	7	101,103
5 5DR	'12-13	✓	✓	✓	10	✓	✓	10	✓	✓	10	✓	✓	10	101,102,128
	'06-11	✓	✓	✓	10	✓	✓	10	✓	✓	10	✓	✓	10	101,102,128
6 4DR	'09-13	✓	✓	✓	8	✓	✓	8	✓	✓	8	✓	✓	8	101,102,116,128
	'03-08	✓	✓	✓	8	✓	✓	8	✓	✓	8	✓	✓	8	101,102,116,128
6 5DR	'04-08														135
6 Wagon	'04-07	✓	✓	✓	10	✓	✓	10	✓	✓	10	✓	✓	10	101,102,128
626	'93-02														135
929	'92-96														133
B-Series	'94-10														
CX-5	'13	✓	✓	✓	10	✓	✓	10	✓	✓	10	✓	✓	10	101,102,121,128
CX-7	'07-12	✓	✓	✓	9	✓	✓	9	✓	✓	9	✓	✓	9	101,102,121,128,151
CX-9	'07-13	✓	✓	✓	10	✓	✓	10	✓	✓	10	✓	✓	10	101,102,121,128
Miata	'90-05	✓			5	✓		5	✓		5	✓		5	101,103,126,132,138
Millenia	'95-02														133
MPV	'00-06	✓	✓	✓	10	✓	✓	10	✓	✓	10	✓	✓	10	101,102,121,128
	'91-98	✓	✓	✓	10	✓	✓	10	✓	✓	10	✓	✓	10	101,102,121
MX-3	'92-96	✓			6	✓		6	✓		6	✓		6	101,103,121,132
MX-5	'06-09														135
MX-6	'93-97	✓			4	✓		4	✓		4	✓		4	101,108,132
Navajo	'90-95	✓	✓	✓	9	✓	✓	9	✓	✓	9	✓	✓	9	101,102,121,139
Pickup	'79-93														135
Protege 4DR	'99-03	✓	✓	✓	7	✓	✓	7	✓	✓	7	✓	✓	7	101,102,116,128
	'95-98	✓	✓	✓	6	✓	✓	6	✓	✓	6	✓	✓	6	101,102,126
	'90-94	✓	✓	✓	6	✓	✓	6	✓	✓	6	✓	✓	6	101,102,126
Protégé 5 Wagon	'02-03														135,137
RX-7	'93-98														134
RX-8	'04-11														135
Tribute	'08-11	✓	✓	✓	10	✓	✓	10	✓	✓	10	✓	✓	10	101,102,121,128
	'01-06	✓	✓	✓	10	✓	✓	10	✓	✓	10	✓	✓	10	101,102,121,128

MAZADA

190 4DR	'92-00														133

THULE 2012 REAR MOUNTED FIT GUIDE

NOTE: If your vehicle is not listed below, it may be a NO FIT. For the most up to date information consult Thule Fit

MAZADA continued

Vehicle make, model and year		9001 RACEWAY 2	9002 RACEWAY 3	9003 RACEWAY PLATFORM	FIT DIAL SETTING	9009 / 9009XT ARCHWAY 2	9010 / 9010XT ARCHWAY 3	FIT DIAL SETTING	9006 / 9006XT GATEWAY 2	9007 / 9007XT GATEWAY 3	FIT DIAL SETTING	910XT PASSAGE 2	911XT PASSAGE 3 933 VENTURE	FIT DIAL SETTING	
300 Wagon	'88-98	✓	✓	✓	8	✓	✓	8	✓	✓	8	✓	✓	8	101,102,121,138
300 CD	'87-87	✓	✓	✓	6	✓	✓	6	✓	✓	6	✓	✓	6	101,102,138
300 CE	'88-88	✓	✓	✓	6	✓	✓	6	✓	✓	6	✓	✓	6	101,102,138
300 SDL 4DR	'87-87	✓	✓	✓	6	✓	✓	6	✓	✓	6	✓	✓	6	101,109,138
300 SE	'92-99	✓	✓	✓	6	✓	✓	6	✓	✓	6	✓	✓	6	101,102,138
420 SEL	'88-88	✓	✓	✓	6	✓	✓	6	✓	✓	6	✓	✓	6	101,109,138
560 SEC	'89-89	✓	✓	✓	6	✓	✓	6	✓	✓	6	✓	✓	6	101,109,138
560 SEL	'92-96														133
560 SL 2DR	'87-87														133
B Class 5DR	'10-13	✓	✓	✓	10	✓	✓	10	✓	✓	10	✓	✓	10	101,102,116,121,128
C Class 2DR	'12-13	✓	✓	✓	7	✓	✓	7	✓	✓	7	✓	✓	7	101,102,128
	'05-07	✓	✓	✓	7	✓	✓	7	✓	✓	7	✓	✓	7	101,102,116,128
	'02-04														134
C Class 4DR	'07-13	✓	✓	✓	7	✓	✓	7	✓	✓	7	✓	✓	7	101,102,116,128
	'05-06	✓	✓	✓	7	✓	✓	7	✓	✓	7	✓	✓	7	101,102,116,128
	'01-04	✓	✓	✓	7	✓	✓	7	✓	✓	7	✓	✓	7	101,102,128
	'92-00														133
C Class Wagon	'08-12														134
	'05-06														134
	'02-04														134
CL Class	'11-13	✓	✓	✓	7	✓	✓	7	✓	✓	7	✓	✓	7	101,102,128
	'07-10	✓	✓	✓	7	✓	✓	7	✓	✓	7	✓	✓	7	101,102,128
CLS Class 2DR	'06-12														135
CLS Class 4DR	'11-13	✓	✓	✓	7	✓	✓	7	✓	✓	7	✓	✓	7	101,102,128
E Class 2DR	'10-13														135
E-Class 4DR	'10-13	✓	✓	✓	7	✓	✓	6	✓	✓	6	✓	✓	6	101,102,138
	'96-09	✓	✓	✓	7	✓	✓	6	✓	✓	6	✓	✓	6	101,102,138
E Class Wagon	'11-13														134
	'04-10														134
	'98-03														134
G Class	'02-13														151
GL Class	'13														135
	'06-12														135
GLK	'09-13														134
M Class	'12-13	✓	✓		9	✓	✓	9	✓	✓	9	✓	✓	9	101,102,121,128
	'06-11	✓	✓		9	✓	✓	9	✓	✓	9	✓	✓	9	101,102,121,128
	'98-05														134,137
R Class	'11-12	✓	✓	✓	10	✓	✓	10	✓	✓	10	✓	✓	10	101,102,121,128
	'06-10	✓	✓	✓	10	✓	✓	10	✓	✓	10	✓	✓	10	101,102,121,128
S Class	'00-13														NO FIT
SL Class	'05-13														NO FIT
SLK Class	'05-13														NO FIT

MERCURY

Cougar	'99-02														135
	'89-98	✓			6	✓		6	✓		6	✓		6	101,103,125,132,138
	'87-88														NO FIT
Grand Marquis	'92-09	✓			6	✓		6	✓		6	✓		6	101,105,116,132
	'88-89	✓	✓	✓	7	✓	✓	7	✓	✓	7	✓	✓	7	101,108
Mariner	'05-10	✓	✓	✓	10	✓	✓	10	✓	✓	10	✓	✓	10	101,102,121,128

THULE 2012 REAR MOUNTED FIT GUIDE

NOTE: If your vehicle is not listed below, it may be a NO FIT. For the most up to date information consult Thule Fit

MERCURY continued

Vehicle make, model and year		9001 RACEWAY 2	9002 RACEWAY 3	9003 RACEWAY PLATFORM	FIT DIAL SETTING	9009 / 9009XT ARCHWAY 2	9010 / 9010XT ARCHWAY 3	FIT DIAL SETTING	9006 / 9006XT GATEWAY 2	9007 / 9007XT GATEWAY 3	FIT DIAL SETTING	910XT PASSAGE 2	911XT PASSAGE 3 933 VENTURE	FIT DIAL SETTING	
Marauder	'03-04	✓			6	✓		6	✓		6	✓		6	101,105,116,132
Milan	'06-10	✓			8	✓		8	✓		8	✓		8	101,102,116,128,132
Montego	'05-07	✓	✓	✓	8	✓	✓	8	✓	✓	8	✓	✓	8	101,102,116,128
Monterey	'04-07	✓	✓	✓	10	✓	✓	10	✓	✓	10	✓	✓	10	101,102,121,138
Mountaineer	'02-10	✓	✓	✓	10	✓	✓	10	✓	✓	10	✓	✓	10	101,102,121,128
	'96-01	✓	✓	✓	10	✓	✓	10	✓	✓	10	✓	✓	10	101,102,121
Mystique	'95-00	✓			6	✓		6	✓		6	✓		6	101,103,118
Sable 4DR	'08-09	✓			8	✓		8	✓		8	✓		8	101,102,116,128,132
	'00-05	✓			6	✓		6	✓		6	✓		6	101,106,126,132
	'96-99	✓			6	✓		6	✓		6	✓		6	101,106,126,132
	'92-95														135
	'86-91	✓			6	✓		6	✓		6	✓		6	101,103,132,138
Sable Wagon	'96-05	✓	✓	✓	9	✓	✓	9	✓	✓	9	✓	✓	9	101,106,121
	'85-95	✓	✓	✓	8	✓	✓	8	✓	✓	8	✓	✓	8	101,102,121,138
Topaz 4DR	'90-94	✓			6	✓		6	✓		6	✓		6	101,108,132,138
Tracer 4DR	'97-99														135
	'91-96	✓	✓	✓	6	✓	✓	6	✓	✓	6	✓	✓	6	101,102,138
Tracer Wagon	'91-99	✓	✓	✓	9	✓	✓	9	✓	✓	9	✓	✓	9	101,102,121,138
Villager	'99-02	✓	✓	✓	10	✓	✓	10	✓	✓	10	✓	✓	10	101,102,121,128
	'93-98	✓			10	✓		10	✓		10	✓		10	101,102,121,126,132,138

MINI

Clubman	'08-13														135
Clubvan	'13														135
Cooper (includes JCW models)	'03-13	✓	✓	✓	10	✓	✓	10	✓	✓	10	✓	✓	10	101,102,121,128
Cooper Coupe	'12-13														NO FIT
Countryman	'11-13														135
Cooper Roadster	'12-13														CHECK FOR UPDATE

MITSUBISHI

3000GT	'91-99														134,135
Diamante 4DR	'97-04	✓	✓	✓	7	✓	✓	7	✓	✓	7	✓	✓	7	101,102,128
	'91-96	✓	✓	✓	5	✓	✓	5	✓	✓	5	✓	✓	5	101,108,126,138
Diamante Wagon	'92-96	✓	✓	✓	8	✓	✓	8	✓	✓	8	✓	✓	8	101,102,121,127
Eclipse	'10-12														134,135
	'06-09														134,135
	'95-03														134,135
Endeavor	'04-11	✓	✓	✓	10	✓	✓	10	✓	✓	10	✓	✓	10	101,102,121,128
Expo/Expo LRV	'92-95	✓	✓	✓	9	✓	✓	9	✓	✓	9	✓	✓	9	101,102,121,138
Galant	'04-12	✓	✓	✓	7	✓	✓	7	✓	✓	7	✓	✓	7	101,102,128
	'97-03	✓	✓	✓	6	✓	✓	6	✓	✓	6	✓	✓	6	101,102,128
	'94-96	✓	✓	✓	5	✓	✓	5	✓	✓	5	✓	✓	5	101,102,138
	'89-93	✓	✓	✓	5	✓	✓	5	✓	✓	5	✓	✓	5	101,102,138
	'85-88	✓	✓	✓	5	✓	✓	5	✓	✓	5	✓	✓	5	101,108,114
Galant GTZ	'99-03														135
Lancer 4DR	'08-13	✓	✓	✓	7	✓	✓	7	✓	✓	7	✓	✓	7	101,102,128
	'02-07	✓	✓	✓	7	✓	✓	7	✓	✓	7	✓	✓	7	101,102,128
Lancer Sportback	'10-13														137
	'04-05														134
MiEV	'12-13														CHECK FOR UPDATE

THULE 2012 REAR MOUNTED FIT GUIDE

NOTE: If your vehicle is not listed below, it may be a NO FIT. For the most up to date information consult Thule Fit

MITSUBISHI continued

Vehicle make, model and year		9001 RACEWAY 2	9002 RACEWAY 3	9003 RACEWAY PLATFORM	FIT DIAL SETTING	9009 / 9009XT ARCHWAY 2	9010 / 9010XT ARCHWAY 3	FIT DIAL SETTING	9006 / 9006XT GATEWAY 2	9007 / 9007XT GATEWAY 3	FIT DIAL SETTING	910XT PASSAGE 2	911XT PASSAGE 3 933 VENTURE	FIT DIAL SETTING	
Mirage 2DR	'00-02	✓	✓	✓	6	✓	✓	6	✓	✓	6	✓	✓	6	101,108,128
	'97-99														133
	'93-96														133
	'89-92	✓	✓	✓	8	✓	✓	8	✓	✓	8	✓	✓	8	101,102
	'85-88														133
Mirage 4DR	'00-01	✓	✓	✓	6	✓	✓	6	✓	✓	6	✓	✓	6	101,108,128
	'97-99														133
	'93-94	✓	✓	✓	5	✓	✓	5	✓	✓	5	✓	✓	5	101,102,138
	'89-92	✓	✓	✓	5	✓	✓	5	✓	✓	5	✓	✓	5	101,102,138
	'87-88														133
Montero	'90-06														
Montero 2DR	'84-90														137
Montero Sport	'97-04	✓			9	✓		9	✓		9	✓		9	101,102,121,132,138
Outlander	'07-13														134
	'03-06														134
Outlander Sport	'11-13														134
Pickup	'83-96														
Precis 2DR	'90-93	✓	✓	✓	7	✓	✓	7	✓	✓	7	✓	✓	7	101,108,138
Raider	'06-10														148
RVR (Canada)	'11-13														134
Starion	'85-89														134,135

NISSAN

200SX	'95-98	✓			6	✓		6	✓		6	✓		6	101,102,132,138
240SX Coupe	'93-93														134
300ZX	'90-93	✓			6	✓		6	✓		6	✓		6	101,103,128,132
350Z	'03-09														133
370Z	'09-13														133
Altima 2DR	'13					✓		7	✓		7	✓		7	101,102,138
	'08-12					✓		7	✓		7	✓		7	101,102,138
Altima 4DR	'13	✓	✓	✓	8	✓	✓	8	✓	✓	8	✓	✓	8	101,102,128
	'07-12	✓	✓	✓	8	✓	✓	8	✓	✓	8	✓	✓	8	101,102,128
	'02-06	✓	✓	✓	7	✓	✓	7	✓	✓	7	✓	✓	7	101,102,138
	'98-01	✓			6	✓		6	✓		6	✓		6	101,102,139,140
	'93-97	✓			5	✓		5	✓		5	✓		5	101,102,140
Armada	'08-13	✓	✓	✓	11	✓	✓	11	✓	✓	11	✓	✓	11	101,112,121,128
	'04-07	✓	✓	✓	11	✓	✓	11	✓	✓	11	✓	✓	11	101,112,121,128
Cube	'09-13	✓	✓	✓	11	✓	✓	11	✓	✓	11	✓	✓	11	101,102,119,121
Frontier	'05-13														148
	'98-04														148
GT-R	'08-12														NO FIT
Juke 5DR	'11-13	✓	✓	✓	9	✓	✓	9	✓	✓	9	✓	✓	9	101,102,121,128
Leaf 5DR	'11-13														CHECK FOR UPDATE
Maxima 4DR	'09-13	✓			7	✓		7	✓		7	✓		7	101,102,116,128
	'04-08	✓	✓	✓	8	✓	✓	8	✓	✓	8	✓	✓	8	101,102,128
	'00-03	✓	✓	✓	6	✓	✓	6	✓	✓	6	✓	✓	6	101,103,125,128
	'95-99														135
	'87-94	✓	✓	✓	6	✓	✓	6	✓	✓	6	✓	✓	6	101,103
Maxima Wagon	'87-88	✓	✓	✓	8	✓	✓	8	✓	✓	8	✓	✓	8	101,102,121,138
Murano	'03-12	✓			10	✓		10	✓		10	✓		10	101,102,121,141

THULE 2012 REAR MOUNTED FIT GUIDE

NOTE: If your vehicle is not listed below, it may be a NO FIT. For the most up to date information consult Thule Fit

NISSAN continued

Vehicle make, model and year		9001 RACEWAY 2	9002 RACEWAY 3	9003 RACEWAY PLATFORM	FIT DIAL SETTING	9009 / 9009XT ARCHWAY 2	9010 / 9010XT ARCHWAY 3	FIT DIAL SETTING	9006 / 9006XT GATEWAY 2	9007 / 9007XT GATEWAY 3	FIT DIAL SETTING	910XT PASSAGE 2	911XT PASSAGE 3 933 VENTURE	FIT DIAL SETTING	
Murano CrossCabriolet	'11-12														NO FIT
NX 1600, 2000	'92-94	✓	✓	✓	6	✓	✓	6	✓	✓	6	✓	✓	6	101,103,121
NV200 Van	'12-13														NO FIT
NV 1500 / 2500 / 3500 Van	'12-13														NO FIT
Pathfinder	'13	✓	✓	✓	11	✓	✓	11	✓	✓	11	✓	✓	11	101,102,121,128
	'05-12	✓	✓	✓	11	✓	✓	11	✓	✓	11	✓	✓	11	101,102,121,128
	'96-04	✓	✓	✓	10	✓	✓	10	✓	✓	10	✓	✓	10	101,102,121,128
Pathfinder w/ Spare	'96-01														
Pathfinder w/o Spare	'92-95	✓			10	✓		10	✓		10	✓		10	101,103,121,127,132,138
Pulsar	'87-88	✓			6	✓		6	✓		6	✓		6	101,105,132
Quest	'12-13	✓	✓	✓	11	✓	✓	11	✓	✓	11	✓	✓	11	101,102,121,128
	'04-11	✓	✓	✓	11	✓	✓	11	✓	✓	11	✓	✓	11	101,102,121,128
	'99-02	✓	✓	✓	10	✓	✓	10	✓	✓	10	✓	✓	10	101,102,121,128
	'93-98	✓			10	✓		10	✓		10	✓		10	101,102,126,132,138
Rogue	'08-13	✓	✓	✓	10	✓	✓	10	✓	✓	10	✓	✓	10	101,102,121,128,151
Sentra 2DR	'95-99	✓			6	✓		6	✓		6	✓		6	101,102,132,138
	'91-94	✓	✓	✓	6	✓	✓	6	✓	✓	6	✓	✓	6	101,102,138
	'90	✓	✓	✓	6	✓	✓	6	✓	✓	6	✓	✓	6	101,102,138
Sentra 4DR	'13														CHECK FOR UPDATE
	'07-12	✓	✓	✓	8	✓	✓	8	✓	✓	8	✓	✓	8	101,102,128
	'00-06	✓	✓	✓	7	✓	✓	7	✓	✓	7	✓	✓	7	101,102,116,128
	'95-99	✓			6	✓		6	✓		6	✓		6	101,102,132,138
	'91-94	✓	✓	✓	6	✓	✓	6	✓	✓	6	✓	✓	6	101,102,138
	'82-90	✓	✓	✓	6	✓	✓	6	✓	✓	6	✓	✓	6	101,102,138
Stanza 4DR	'91-92	✓	✓	✓	6	✓	✓	6	✓	✓	6	✓	✓	6	101,103
Titan Pick-up	'04-13														148
Versa 4DR	'12-13	✓	✓	✓	7	✓	✓	7	✓	✓	7	✓	✓	7	101,102,128
	'07-11	✓	✓	✓	8	✓	✓	8	✓	✓	8	✓	✓	8	101,102,128
Versa 5DR	'13														CHECK FOR UPDATE
Versa 5DR	'07-12	✓	✓	✓	9	✓	✓	9	✓	✓	9	✓	✓	9	101,102,121,128
Xterra	'05-13	✓	✓	✓	11	✓	✓	11	✓	✓	11	✓	✓	11	101,102,121,128
	'00-04	✓	✓	✓	11	✓	✓	11	✓	✓	11	✓	✓	11	101,121,125,128,130

OLDSMOBILE

98 Regency	'92-98	✓	✓	✓	7	✓	✓	7	✓	✓	7	✓	✓	7	101,126,130
Achieva 4DR	'92-98	✓	✓	✓	6	✓	✓	6	✓	✓	6	✓	✓	6	101,102
Alero 2DR	'99-04	✓			5	✓		5	✓		5	✓		5	101,126,128,132,142
Alero 4DR	'99-04	✓			5	✓		5	✓		5	✓		5	101,126,128,132,142
Aurora	'01-03	✓	✓	✓	7	✓	✓	7	✓	✓	7	✓	✓	7	101,102,128
	'95-00														135
Bravada	'02-04														135,137
	'96-01														135,137,144
	'91-94														134
Custom Cruiser Wagon	'92-95														135
Cutlass	'97-99	✓	✓	✓	6	✓	✓	6	✓	✓	6	✓	✓	6	101,128,142
Cutlass Ciera 4DR	'82-96														133
Cutlass Cruiser Wagon	'83-94														134
Cutlass Supreme 2DR	'88-96														135
Cutlass Supreme 4DR	'90-97	✓			6	✓		6	✓		6	✓		6	101,108,132
Delta 88 Royale	'92-99	✓	✓	✓	6	✓	✓	6	✓	✓	6	✓	✓	6	101,105

THULE 2012 REAR MOUNTED FIT GUIDE

NOTE: If your vehicle is not listed below, it may be a NO FIT. For the most up to date information consult Thule Fit

OLDSMOBILE continued

Vehicle make, model and year		9001 RACEWAY 2	9002 RACEWAY 3	9003 RACEWAY PLATFORM	FIT DIAL SETTING	9009 / 9009XT ARCHWAY 2	9010 / 9010XT ARCHWAY 3	FIT DIAL SETTING	9006 / 9006XT GATEWAY 2	9007 / 9007XT GATEWAY 3	FIT DIAL SETTING	910XT PASSAGE 2	911XT PASSAGE 3 933 VENTURE	FIT DIAL SETTING	
Intrigue 4DR	'97-02														135
LSS	'96-99	✓	✓	✓	6	✓	✓	6	✓	✓	6	✓	✓	6	101,105,128
Silhouette	'97-04	✓	✓	✓	10	✓	✓	10	✓	✓	10	✓	✓	10	101,102,121,138
Silhouette	'90-96														137

PONTIAC

Aztec	'01-05	✓			10	✓		10	✓		10	✓		10	101,112,121,125,132,138
Bonneville	'00-05	✓	✓	✓	5	✓	✓	5	✓	✓	5	✓	✓	5	101,138,142
	'94-99	✓			6	✓		6	✓		6	✓		6	101,110,116,132
	'86-93														135
Firebird	'79-02														134
G3 5DR	'08-10	✓			9	✓		9	✓		9	✓		9	101,128,132,147
G3 Wave 5DR (Canada)	'08-10	✓			9	✓		9	✓		9	✓		9	101,128,132,147
G5 2DR	'07-09	✓	✓	✓	7	✓	✓	7	✓	✓	7	✓	✓	7	101,102,128
G5 4DR	'07-09	✓	✓	✓	7	✓	✓	7	✓	✓	7	✓	✓	7	101,110,128
G6 Coupe	'06-09	✓	✓	✓	7	✓	✓	7	✓	✓	7	✓	✓	7	101,102,128
G6 4DR	'05-09	✓	✓	✓	7	✓	✓	7	✓	✓	7	✓	✓	7	101,102,128
G8 4DR	'08-09	✓	✓	✓	7	✓	✓	7	✓	✓	7	✓	✓	7	101,102,128
Grand Am 2DR	'99-05	✓			5	✓		5	✓		5	✓		5	101,126,128,132,142
	'92-98														135
	'85-91	✓	✓	✓	6	✓	✓	6	✓	✓	6	✓	✓	6	101,109
Grand Am 4DR	'99-05	✓			5	✓		5	✓		5	✓		5	101,126,128,132,142
	'92-98														135
Grand Prix 2DR	'97-02	✓	✓	✓	7	✓	✓	7	✓	✓	7	✓	✓	7	101,102,128
	'88-96	✓	✓	✓	6	✓	✓	6	✓	✓	6	✓	✓	6	101,108
Grand Prix 4DR	'04-08	✓	✓	✓	7	✓	✓	7	✓	✓	7	✓	✓	7	101,102,128
	'97-03	✓	✓	✓	7	✓	✓	7	✓	✓	7	✓	✓	7	101,102,128
	'88-96	✓	✓	✓	6	✓	✓	6	✓	✓	6	✓	✓	6	101,108
GTO	'04-06														146
LeMans	'88-93	✓	✓	✓	7	✓	✓	7	✓	✓	7	✓	✓	7	101,102,138
Montana	'99-05	✓	✓	✓	10	✓	✓	10	✓	✓	10	✓	✓	10	101,102,121,138
Montana SV6	'05-06	✓	✓	✓	11	✓	✓	11	✓	✓	11	✓	✓	11	101,102,121,128
Solstice	'06-09														137
Sunbird 2DR	'85-94	✓	✓	✓	6	✓	✓	6	✓	✓	6	✓	✓	6	101,110
Sunbird 4DR	'85-94	✓	✓	✓	6	✓	✓	6	✓	✓	6	✓	✓	6	101,110
Sunfire 2DR	'95-05	✓			7	✓		7	✓		7	✓		7	101,132,142
Sunfire 4DR	'95-05	✓			7	✓		7	✓		7	✓		7	101,132,142
Torrent	'06-09	✓	✓	✓	11	✓	✓	11	✓	✓	11	✓	✓	11	101,112,121,128
Trans Sport	'97-98	✓	✓	✓	10	✓	✓	10	✓	✓	10	✓	✓	10	101,102,121,138
	'90-96														137
Vibe	'03-10	✓	✓	✓	9	✓	✓	9	✓	✓	9	✓	✓	9	101,102,121,128

PORSCHE

Cayenne	'03-13	✓	✓	✓	10	✓	✓	10	✓	✓	10	✓	✓	10	101,102,121,128
Panamera 4DR	'10-13														134

SAAB

9-2x	'05-06	✓	✓	✓	8	✓	✓	8	✓	✓	8	✓	✓	8	101,102,121,127,128
9-3 3DR	'99-02	✓	✓	✓	7	✓	✓	7	✓	✓	7	✓	✓	7	101,102,121,138
9-3 4DR	'06-12	✓	✓	✓	7	✓	✓	7	✓	✓	7	✓	✓	7	101,102,128

THULE 2012 REAR MOUNTED FIT GUIDE

NOTE: If your vehicle is not listed below, it may be a NO FIT. For the most up to date information consult Thule Fit

SAAB continued

Vehicle make, model and year		9001 RACEWAY 2	9002 RACEWAY 3	9003 RACEWAY PLATFORM	FIT DIAL SETTING	9009 / 9009XT ARCHWAY 2	9010 / 9010XT ARCHWAY 3	FIT DIAL SETTING	9006 / 9006XT GATEWAY 2	9007 / 9007XT GATEWAY 3	FIT DIAL SETTING	910XT PASSAGE 2	911XT PASSAGE 3 933 VENTURE	FIT DIAL SETTING	
9-3 4DR	'03-05	✓	✓	✓	8	✓	✓	8	✓	✓	8	✓	✓	8	101,102,128
9-3 Convertible	'06-12	✓	✓	✓	7	✓	✓	7	✓	✓	7	✓	✓	7	101,102,128
	'03-05	✓	✓	✓	7	✓	✓	7	✓	✓	7	✓	✓	7	101,102,128
9-3 5DR	'99-03	✓	✓	✓	7	✓	✓	7	✓	✓	7	✓	✓	7	101,102,121,138
9-3 Sport Combi	'06-12	✓			7	✓		7	✓		7	✓		7	101,102,121,141
9-3x	'10-12														134
9-4X	'10-12	✓	✓	✓	10	✓	✓	10	✓	✓	10	✓	✓	10	101,102,121,128,129
9-5 4DR	'10-12	✓	✓	✓	7	✓	✓	7	✓	✓	7	✓	✓	7	101,102,128
	'99-09	✓	✓	✓	7	✓	✓	7	✓	✓	7	✓	✓	7	101,102,128
9-5 Wagon	'99-12	✓	✓	✓	9	✓	✓	9	✓	✓	9	✓	✓	9	101,102,121,128
9-7x	'05-09														135,137
900 2DR	'69-93														135
900 3DR	'94-98	✓	✓	✓	7	✓	✓	7	✓	✓	7	✓	✓	7	101,102,121,138
900 4DR	89-93	✓	✓	✓	7	✓	✓	7	✓	✓	7	✓	✓	7	101,103
900 5DR	'94-98	✓	✓	✓	7	✓	✓	7	✓	✓	7	✓	✓	7	101,102,121,138
900 Convertible	'95	✓			6	✓		6	✓		6	✓		6	101,102,132,138
9000 4DR	'86-98	✓			6	✓		6	✓		6	✓		6	101,102,132
9000 Hatchback	'86-98														134

SATURN

Astra 3DR	'08-10	✓	✓	✓	7	✓	✓	7	✓	✓	7	✓	✓	7	101,102,127,128
Astra 5DR	'08-10	✓	✓	✓	7	✓	✓	7	✓	✓	7	✓	✓	7	101,102,127,128
Aura	'07-10	✓	✓	✓	7	✓	✓	7	✓	✓	7	✓	✓	7	101,102,127,128
Ion 2DR	'03-08	✓	✓	✓	7	✓	✓	7	✓	✓	7	✓	✓	7	101,102,128
Ion 4DR	'03-08	✓	✓	✓	7	✓	✓	7	✓	✓	7	✓	✓	7	101,102,128
LS 4DR	'00-04	✓	✓	✓	7	✓	✓	7	✓	✓	7	✓	✓	7	101,102,128
LW Wagon	'00-04	✓	✓	✓	9	✓	✓	9	✓	✓	9	✓	✓	9	101,121,128,142
Outlook	'07-10	✓	✓	✓	9	✓	✓	9	✓	✓	9	✓	✓	9	101,102,121,128
Relay	'05-07	✓	✓	✓	11	✓	✓	11	✓	✓	11	✓	✓	11	101,102,121,128
SC 2DR	'97-02														135
	'91-96														133
SC 3DR	'97-02														135
Sky	'07-10														146
SL 4DR	'96-02	✓			6	✓		6	✓		6	✓		6	101,108,132
	91-95	✓			6	✓		6	✓		6	✓		6	101,105,132
SW Wagon	'93-01	✓			8	✓		8	✓		8	✓		8	101,102,121,126,132
Vue	'08-10														134
	'02-07	✓	✓	✓	11	✓	✓	11	✓	✓	11	✓	✓	11	101,112,121,128

SCION

FR-S	'12-13														NO FIT
IQ	'12-13														CHECK FOR UPDATE
tC	'11-13														CHECK FOR UPDATE
	'04-10														134
xA	'04-07	✓	✓	✓	9	✓	✓	9	✓	✓	9	✓	✓	9	101,102,121,128
xB	'08-13	✓	✓	✓	11	✓	✓	11	✓	✓	11	✓	✓	11	101,102,121,128
	'04-07														135
xD	'08-13	✓			10	✓		10	✓		10	✓		10	101,102,116,121,128,132

THULE 2012 REAR MOUNTED FIT GUIDE

NOTE: If your vehicle is not listed below, it may be a NO FIT. For the most up to date information consult Thule Fit

Vehicle make, model and year		9001 RACEWAY 2	9002 RACEWAY 3	9003 RACEWAY PLATFORM	FIT DIAL SETTING	9009 / 9009XT ARCHWAY 2	9010 / 9010XT ARCHWAY 3	FIT DIAL SETTING	9006 / 9006XT GATEWAY 2	9007 / 9007XT GATEWAY 3	FIT DIAL SETTING	910XT PASSAGE 2	911XT PASSAGE 3 933 VENTURE	FIT DIAL SETTING	
SMART															
Fortwo	'08-13														135
SUBARU															
Baja	'03-07														146
Forester	'09-13	✓	✓	✓	10	✓	✓	10	✓	✓	10	✓	✓	10	101,102,121,128
	'03-08	✓	✓	✓	10	✓	✓	10	✓	✓	10	✓	✓	10	101,102,121,128
	'98-02	✓	✓	✓	9	✓	✓	9	✓	✓	9	✓	✓	9	101,102,128
Impreza 2DR	'95-01	✓			6	✓		6	✓		6	✓		6	101,111,132
Impreza 4DR	'12-13	✓	✓	✓	7	✓	✓	7	✓	✓	7	✓	✓	7	101,102,128
	'08-11	✓	✓	✓	7	✓	✓	7	✓	✓	7	✓	✓	7	101,102,128
	'02-07	✓	✓	✓	6	✓	✓	6	✓	✓	6	✓	✓	6	101,102,128
	'93-01	✓			5	✓		5	✓		5	✓		5	101,102,132,139
Impreza WRX / WRX STI 4DR (w/o Spoiler)	'12-13	✓	✓	✓	7	✓	✓	7	✓	✓	7	✓	✓	7	101,102,128
	'08-11	✓	✓	✓	7	✓	✓	7	✓	✓	7	✓	✓	7	101,102,128
	'02-07	✓	✓	✓	6	✓	✓	6	✓	✓	6	✓	✓	6	101,102,128
	'93-01	✓			5	✓		5	✓		5	✓		5	101,102,132,139
Impreza 5DR	'12-13	✓	✓	✓	8	✓	✓	8	✓	✓	8	✓	✓	8	101,102,121,127,128
	'08-11	✓	✓	✓	8	✓	✓	8	✓	✓	8	✓	✓	8	101,102,121,127,128
	'02-07	✓	✓	✓	8	✓	✓	8	✓	✓	8	✓	✓	8	101,102,121,127,128
	'93-99	✓			9	✓		9	✓		9	✓		9	101,102,121,128,132
Impreza WRX / WRX STI 5DR (w/o Spoiler)	'12-13	✓	✓	✓	8	✓	✓	8	✓	✓	8	✓	✓	8	101,102,121,127,128
	'08-11	✓	✓	✓	8	✓	✓	8	✓	✓	8	✓	✓	8	101,102,121,127,128
	'02-07	✓	✓	✓	8	✓	✓	8	✓	✓	8	✓	✓	8	101,102,121,127,128
	'93-99	✓			9	✓		9	✓		9	✓		9	101,102,121,128,132
Justy	'87-94	✓	✓	✓	7	✓	✓	7	✓	✓	7	✓	✓	7	101,102,121
Legacy 4DR	'10-13	✓	✓	✓	8	✓	✓	8	✓	✓	8	✓	✓	8	101,102,128
	'05-09	✓	✓	✓	8	✓	✓	8	✓	✓	8	✓	✓	8	101,128,147
	'00-04	✓	✓	✓	7	✓	✓	7	✓	✓	7	✓	✓	7	101,102,128,129
	'95-99	✓			6	✓		6	✓		6	✓		6	101,103,132,138
	'90-94	✓			6	✓		6	✓		6	✓		6	101,103,132
Legacy Wagon (Canada)	'09-12	✓	✓	✓	9	✓	✓	9	✓	✓	9	✓	✓	9	101,102,121,128
Legacy Wagon	'05-07	✓	✓	✓	9	✓	✓	9	✓	✓	9	✓	✓	9	101,102,121,128
	'00-04	✓	✓	✓	9	✓	✓	9	✓	✓	9	✓	✓	9	101,102,121,128
	'89-94	✓	✓	✓	9	✓	✓	9	✓	✓	9	✓	✓	9	101,102,138
Legacy/Outback Wagon	'95-99	✓	✓	✓	8	✓	✓	8	✓	✓	8	✓	✓	8	101,102,121,138
Loyale 2DR	'90-92	✓	✓	✓	6	✓	✓	6	✓	✓	6	✓	✓	6	101,103
Loyale 4DR	'90-92	✓	✓	✓	6	✓	✓	6	✓	✓	6	✓	✓	6	101,103
Loyale Wagon	'90-94	✓	✓	✓	9	✓	✓	9	✓	✓	9	✓	✓	9	101,102,121,138
Outback 4DR	'05-07	✓	✓	✓	8	✓	✓	8	✓	✓	8	✓	✓	8	101,128,132,147
	'00-04	✓	✓	✓	7	✓	✓	7	✓	✓	7	✓	✓	7	101,102,128,129
Outback Sport	'02-11	✓	✓	✓	8	✓	✓	8	✓	✓	8	✓	✓	8	101,102,121,127,128
	'00-01	✓			9	✓		9	✓		9	✓		9	101,102,121,128,132
Outback Wagon	'10-13	✓	✓	✓	10	✓	✓	10	✓	✓	10	✓	✓	10	101,102,121,128
	'05-09														135
	'00-04	✓	✓	✓	9	✓	✓	9	✓	✓	9	✓	✓	9	101,102,121,128
SUS 4DR	'98-99														136
SVX	'92-97														135
Tribeca	'06-13	✓	✓	✓	10	✓	✓	10	✓	✓	10	✓	✓	10	101,102,121,128
XV Crosstrek (w/o Spoiler)	'13	✓	✓	✓	8	✓	✓	8	✓	✓	8	✓	✓	8	101,102,121,127,128

THULE 2012 REAR MOUNTED FIT GUIDE

NOTE: If your vehicle is not listed below, it may be a NO FIT. For the most up to date information consult Thule Fit

SUZUKI

Vehicle make, model and year		9001 RACEWAY 2	9002 RACEWAY 3	9003 RACEWAY PLATFORM	FIT DIAL SETTING	9009 / 9009XT ARCHWAY 2	9010 / 9010XT ARCHWAY 3	FIT DIAL SETTING	9006 / 9006XT GATEWAY 2	9007 / 9007XT GATEWAY 3	FIT DIAL SETTING	910XT PASSAGE 2	911XT PASSAGE 3 933 VENTURE	FIT DIAL SETTING	
Aerio 4DR	'02-07														101,102,128
Aerio SX 5DR	'02-06														134
Esteem 4DR	'95-02	✓			6	✓		6	✓		6	✓		6	101,102,132,138
Esteem Wagon	'98-02	✓			9	✓		9	✓		9	✓		9	101,102,121,128,132
Equator	'09-13														
Forenza 4DR	'05-08														135
Forenza Wagon	'05-08	✓	✓	✓	8	✓	✓	8	✓	✓	8	✓	✓	8	101,102,128,132
Grand Vitara	'06-13														
Kizashi 4DR	'10-13	✓	✓	✓	7	✓	✓	7	✓	✓	7	✓	✓	7	101,102,128
Reno	'05-08	✓	✓	✓	8	✓	✓	8	✓	✓	8	✓	✓	8	101,102,128
Sidekick 2DR	'91-98														
Sidekick 4DR	'91-98														
Swift 2DR	'91-94	✓			5	✓		5	✓		5	✓		5	101,102,132,138
Swift 3DR	'95-01	✓			8	✓		8	✓		8	✓		8	101,102,132
Swift 4DR	'91-94	✓			5	✓		5	✓		5	✓		5	101,102,132,138
SX4 4DR	'07-13	✓	✓	✓	6	✓	✓	6	✓	✓	6	✓	✓	6	101,102,128
SX4 Sport 4DR	'07-13	✓	✓	✓	6	✓	✓	6	✓	✓	6	✓	✓	6	101,102,128
SX4 Sportback 5DR	'07-13	✓			9	✓		9	✓		9	✓		9	101,102,121,128
SX4 Hatchback	'07-13	✓			9	✓		9	✓		9	✓		9	101,102,121,128
Verona	'04-07	✓	✓	✓	7	✓	✓	7	✓	✓	7	✓	✓	7	101,102,128
Vitara	'99-05														
XL-7	'07-09	✓	✓	✓	11	✓	✓	11	✓	✓	11	✓	✓	11	101,112,121,128
	'01-06														

TOYOTA

4 Runner 2DR	'90-95														137
4 Runner 4DR	'03-13	✓	✓	✓	10	✓	✓	10	✓	✓	10	✓	✓	10	101,102,121,128,145
4 Runner 4DR	'96-02	✓	✓	✓	10	✓	✓	10	✓	✓	10	✓	✓	10	101,102,121,127,128
Avalon	'13	✓			7	✓		7	✓		7	✓		7	101,102,128,132
	'05-12	✓			7	✓		7	✓		7	✓		7	101,102,116,128,132
	'00-04	✓	✓	✓	7	✓	✓	7	✓	✓	7	✓	✓	7	101,102,128
	'95-99														133
Camry 2DR	'92-96	✓	✓	✓	6	✓	✓	6	✓	✓	6	✓	✓	6	101,103,125
Camry 4DR	'12-13	✓	✓	✓	7	✓	✓	7	✓	✓	7	✓	✓	7	101,102,128
	'07-11	✓	✓	✓	7	✓	✓	7	✓	✓	7	✓	✓	7	101,102,128
	'02-06	✓	✓	✓	7	✓	✓	7	✓	✓	7	✓	✓	7	101,102,128
	'97-01	✓			6	✓		6	✓		6	✓		6	101,106,125,132,138
	'92-96	✓	✓	✓	6	✓	✓	6	✓	✓	6	✓	✓	6	101,103,125
	'87-91	✓	✓	✓	5	✓	✓	5	✓	✓	5	✓	✓	5	101,108,138
Camry Wagon	'92-96	✓	✓	✓	9	✓	✓	9	✓	✓	9	✓	✓	9	101,102,121
	'87-91	✓	✓	✓	9	✓	✓	9	✓	✓	9	✓	✓	9	101,108,121
Celica	'00-05														135,136
Celica 2DR	'94-99	✓			5	✓		5	✓		5	✓		5	101,103,121,132,138
	'90-93	✓	✓	✓	6	✓	✓	6	✓	✓	6	✓	✓	6	101,103,126,138
Celica 3DR	'94-99	✓			5	✓		5	✓		5	✓		5	101,103,121,132,138
	'90-93	✓	✓	✓	6	✓	✓	6	✓	✓	6	✓	✓	6	101,103,126,138
Celica Coupe	'82-89	✓	✓	✓	6	✓	✓	6	✓	✓	6	✓	✓	6	101,103
Corolla 4DR	'09-13	✓	✓	✓	7	✓	✓	7	✓	✓	7	✓	✓	7	101,102,128
	'03-08	✓	✓	✓	8	✓	✓	8	✓	✓	8	✓	✓	8	101,102,128
	'98-02	✓			7	✓		7	✓		7	✓		7	101,102,128,132

THULE 2012 REAR MOUNTED FIT GUIDE

NOTE: If your vehicle is not listed below, it may be a NO FIT. For the most up to date information consult Thule Fit

TOYOTA continued

Vehicle make, model and year		9001 RACEWAY 2	9002 RACEWAY 3	9003 RACEWAY PLATFORM	FIT DIAL SETTING	9009 / 9009XT ARCHWAY 2	9010 / 9010XT ARCHWAY 3	FIT DIAL SETTING	9006 / 9006XT GATEWAY 2	9007 / 9007XT GATEWAY 3	FIT DIAL SETTING	910XT PASSAGE 2	911XT PASSAGE 3 933 VENTURE	FIT DIAL SETTING	
Corolla 4DR	'93-97	✓			6	✓		6	✓		6	✓		6	101,102,126,132
	'89-92	✓			6	✓		6	✓		6	✓		6	101,102,132
Corolla S 4DR	'09-12	✓	✓	✓	7	✓	✓	7	✓	✓	7	✓	✓	7	101,102,128
	'03-08	✓	✓	✓	8	✓	✓	8	✓	✓	8	✓	✓	8	101,102,128
Corolla Wagon	'93-96	✓	✓	✓	8	✓	✓	8	✓	✓	8	✓	✓	8	101,103,121,138
	88-92	✓	✓	✓	8	✓	✓	8	✓	✓	8	✓	✓	8	101,103,121,138
Echo 2DR	'00-06														135
Echo 4DR	'00-06														135
FJ Cruiser	'07-13														150,152
Highlander	'08-13														134
	'01-07	✓	✓	✓	10	✓	✓	10	✓	✓	10	✓	✓	10	101,102,121,127,128
Land Cruiser	'98-13	✓	✓	✓	11	✓	✓	11	✓	✓	11	✓	✓	11	101,102,121,128
Matrix	'09-13	✓	✓	✓	9	✓	✓	9	✓	✓	9	✓	✓	9	101,102,121,128
	'03-08	✓	✓	✓	9	✓	✓	9	✓	✓	9	✓	✓	9	101,102,121,128
MR-2	'90-93														133
MR2 Spyder	'00-05														135
Paseo	'91-97	✓			6	✓		6	✓		6	✓		6	101,102,132,138
Paseo Convertible	'97														135
Pickup	'79-89														148
Pickup (Small)	'89-96														148
Pickup (Standard)	'89-96														148
Previa	'91-97	✓	✓	✓	9	✓	✓	9	✓	✓	9	✓	✓	9	101,103,125,138
Prius 4DR	'01-03														135
Prius 5DR	'10-13	✓	✓	✓	7	✓	✓	7	✓	✓	7	✓	✓	7	101,102,121,128
	'04-09	✓	✓	✓	7	✓	✓	7	✓	✓	7	✓	✓	7	101,102,121,128
Prius C 5DR	'12-13	✓			8	✓		8	✓		8	✓		8	101,102,121,128
Prius V 5DR Wagon	'12-13	✓			9	✓		9	✓		9	✓		9	101,102,121,138
RAV 4	'13														NO FIT - SPOILER
	'07-12														150, 152
	'01-06														
	'96-00														
Sequoia	'08-13	✓	✓	✓	9	✓	✓	9	✓	✓	9	✓	✓	9	101,102,121,127,138
	'01-07	✓	✓	✓	9	✓	✓	9	✓	✓	9	✓	✓	9	101,102,121,127,138
Sienna	'11-13														NO FIT - SPOILER
	'10	✓	✓	✓	11	✓	✓	11	✓	✓	11	✓	✓	11	101,102,121,128
	'04-09	✓	✓	✓	11	✓	✓	11	✓	✓	11	✓	✓	11	101,102,121,128
	'98-03	✓	✓	✓	10	✓	✓	10	✓	✓	10	✓	✓	10	101,102,121,128
Solara	'04-08	✓			7	✓		7	✓		7	✓		7	101,102,128,132
	'99-03	✓			5	✓		5	✓		5	✓		5	101,102,128,132
Supra	'84-92														135
T100	'93-98														148
Tacoma	'05-13														148
	'96-04														148
Tercel 2DR	'91-99	✓	✓	✓	6	✓	✓	6	✓	✓	6	✓	✓	6	101,102
	'90	✓			8	✓		8	✓		8	✓		8	101,103,132
Tercel 4DR	'91-99	✓	✓	✓	6	✓	✓	6	✓	✓	6	✓	✓	6	101,102
Tercel Wagon	'80-88	✓	✓	✓	9	✓	✓	9	✓	✓	9	✓	✓	9	101,102,139
Tundra	'07-13														148
	'99-06														148
Vans	'84-90	✓	✓	✓	10	✓	✓	10	✓	✓	10	✓	✓	10	101,103,121,138

THULE 2012 REAR MOUNTED FIT GUIDE

NOTE: If your vehicle is not listed below, it may be a NO FIT. For the most up to date information consult Thule Fit

TOYOTA continued

Vehicle make, model and year		9001 RACEWAY 2	9002 RACEWAY 3	9003 RACEWAY PLATFORM	FIT DIAL SETTING	9009 / 9009XT ARCHWAY 2	9010 / 9010XT ARCHWAY 3	FIT DIAL SETTING	9006 / 9006XT GATEWAY 2	9007 / 9007XT GATEWAY 3	FIT DIAL SETTING	910XT PASSAGE 2	911XT PASSAGE 3 933 VENTURE	FIT DIAL SETTING	
Venza	'09-13	✓			9	✓		9	✓		9	✓		9	101,102,121,138
Yaris 3DR (Hatchback)	'12-13	✓	✓	✓	10	✓	✓	10	✓	✓	10	✓	✓	10	101,102,121,128
	'07-11	✓	✓	✓	10	✓	✓	10	✓	✓	10	✓	✓	10	101,102,121,128
Yaris 4DR (Sedan)	'07-12	✓	✓	✓	7	✓	✓	7	✓	✓	7	✓	✓	7	101,102,121,128
Yaris 5DR (Hatchback)	'12-13	✓	✓	✓	10	✓	✓	10	✓	✓	10	✓	✓	10	101,102,121,128
	'07-11	✓	✓	✓	10	✓	✓	10	✓	✓	10	✓	✓	10	101,102,121,128

VOLKSWAGEN

Amarok (Mexico)	'10-13														148
Beetle	'12-14	✓			6	✓	✓	6	✓	✓	6	✓	✓	6	101,102,128,155
	'98-10	✓	✓	✓	7	✓	✓	7	✓	✓	7	✓	✓	7	101,102,128
Beetle Convertible	'03-10														135
Beetle Turbo	'12-14	✓			5	✓	✓	5	✓	✓	5	✓	✓	5	101,102,128,155
Cabriolet	'84-98														137
Corrado	'90-94	✓			6	✓		6	✓		6	✓		6	101,112,121,125,132,138
Eos	'07-13														137
Eurovan	'92-03														133
Fox	'87-94	✓	✓	✓	5	✓	✓	5	✓	✓	5	✓	✓	5	101,102,138
GLI	'08-13	✓	✓	✓	7	✓	✓	7	✓	✓	7	✓	✓	7	101,102,128
Golf (Type VI) 3DR	'10-13	✓	✓	✓	8	✓	✓	8	✓	✓	8	✓	✓	8	101,102,121,128
Golf (Type V) 3DR	'06-09	see "Volkswagen Rabbit 3DR, 06-09													
Golf (Type IV) 3DR	'99-05	✓	✓	✓	8	✓	✓	8	✓	✓	8	✓	✓	8	101,102,121,128
Golf (Type III) 3DR	'93-99	✓			8	✓		8	✓		8	✓		8	101,102,132,138
Golf (Type VI) 5DR	'10-13	✓	✓	✓	8	✓	✓	8	✓	✓	8	✓	✓	8	101,102,121,128
Golf (Type V) 5DR	'06-09	see "Volkswagen Rabbit 3DR, 06-09													
Golf (Type IV) 5DR	'99-06	✓	✓	✓	8	✓	✓	8	✓	✓	8	✓	✓	8	101,102,121,128
Golf (Type III) 5DR	'93-99	✓			8	✓		8	✓		8	✓		8	101,102,132,138
Golf	'85-92	✓			7	✓		7	✓		7	✓		7	101,102,121,132,138
Golf City 5DR (Canada)	'08-10	✓	✓	✓	8	✓	✓	8	✓	✓	8	✓	✓	8	101,102,121,128
Golf R 3DR	'10-13	✓	✓	✓	8	✓	✓	8	✓	✓	8	✓	✓	8	101,102,121,128
Golf R 5DR	'10-13	✓	✓	✓	8	✓	✓	8	✓	✓	8	✓	✓	8	101,102,121,128
Golf Wagon (Canada)	'10-12	✓	✓	✓	10	✓	✓	10	✓	✓	10	✓	✓	10	101,102,121,128
GTI (Type VI) 3DR	'10-13	✓	✓	✓	8	✓	✓	8	✓	✓	8	✓	✓	8	101,102,121,128
GTI (Type V) 3DR	'06-09	✓	✓	✓	8	✓	✓	8	✓	✓	8	✓	✓	8	101,102,121,128
GTI (Type VI) 5DR	'10-13	✓	✓	✓	8	✓	✓	8	✓	✓	8	✓	✓	8	101,102,121,128
GTI (Type V) 5DR	'06-09	✓	✓	✓	8	✓	✓	8	✓	✓	8	✓	✓	8	101,102,121,128
GTI (Type IV) 3DR	'99-06	✓	✓	✓	8	✓	✓	8	✓	✓	8	✓	✓	8	101,102,121,128
GTI (Type III) 3DR	'93-99	✓			8	✓		8	✓		8	✓		8	101,102,132,138
GTI 3DR	'89-92	✓			7	✓		7	✓		7	✓		7	101,102,121,132,138
Jetta (Type VI)	'11-13	✓	✓	✓	7	✓	✓	7	✓	✓	7	✓	✓	7	101,102,128
Jetta (Type V)	'06-10	✓	✓	✓	7	✓	✓	7	✓	✓	7	✓	✓	7	101,102,128
Jetta (Type IV) 4DR	'99-05	✓	✓	✓	7	✓	✓	7	✓	✓	7	✓	✓	7	101,102,128
Jetta (Type III) 4DR	'93-99	✓			6	✓		6	✓		6	✓		6	101,102,132,138
Jetta	'85-92	✓			6	✓		6	✓		6	✓		6	101,103,132,140
Jetta SportWagen / Clean Diesel TDI	'09-13	✓	✓	✓	10	✓	✓	10	✓	✓	10	✓	✓	10	101,102,121,128
Jetta Wagon	'01-08	✓	✓	✓	10	✓	✓	10	✓	✓	10	✓	✓	10	101,102,121,128
Passat 4DR	'12-13	✓	✓	✓	7	✓	✓	7	✓	✓	7	✓	✓	7	101,102,128
	'06-10	✓	✓	✓	7	✓	✓	7	✓	✓	7	✓	✓	7	101,102,128
	'98-05	✓	✓	✓	7	✓	✓	7	✓	✓	7	✓	✓	7	101,102,128
	92-97														133

THULE 2012 REAR MOUNTED FIT GUIDE

NOTE: If your vehicle is not listed below, it may be a NO FIT. For the most up to date information consult Thule Fit

VOLKSWAGEN continued

Vehicle make, model and year		9001 RACEWAY 2	9002 RACEWAY 3	9003 RACEWAY PLATFORM	FIT DIAL SETTING	9009 / 9009XT ARCHWAY 2	9010 / 9010XT ARCHWAY 3	FIT DIAL SETTING	9006 / 9006XT GATEWAY 2	9007 / 9007XT GATEWAY 3	FIT DIAL SETTING	910XT PASSAGE 2	911XT PASSAGE 3 933 VENTURE	FIT DIAL SETTING	
Passat 4DR	'90-91	✓	✓	✓	5	✓	✓	5	✓	✓	5	✓	✓	5	101,103,138
Passat CC	'09-13														135
Passat Wagon	'90-10	✓	✓	✓	10	✓	✓	10	✓	✓	10	✓	✓	10	101,102,121,128
Phaeton	'04-06	✓	✓	✓	7	✓	✓	7	✓	✓	7	✓	✓	7	101,112,128
Rabbit 3DR	'06-09	✓	✓	✓	9	✓	✓	9	✓	✓	9	✓	✓	9	101,102,121,128
Rabbit 5DR	'06-09	✓	✓	✓	9	✓	✓	9	✓	✓	9	✓	✓	9	101,102,121,128
Routan	'11-13	✓	✓	✓	11	✓	✓	11	✓	✓	11	✓	✓	11	101,102,121,128
	'09-10	✓	✓	✓	11	✓	✓	11	✓	✓	11	✓	✓	11	101,102,121,128
Scirocco	'87-89	✓	✓	✓	6	✓	✓	6	✓	✓	6	✓	✓	6	101,103,121,138
Tiguan	'12-13														137
	'08-11														137
Touareg	'08-13	✓	✓	✓	10	✓	✓	10	✓	✓	10	✓	✓	10	101,102,121,128
	'04-07	✓	✓	✓	10	✓	✓	10	✓	✓	10	✓	✓	10	101,102,121,128
Vanagon Van (T3)	80-02	✓	✓	✓	11	✓	✓	11	✓	✓	11	✓	✓	11	101,102,121,123

VOLVO

240/260 4DR	'79-93	✓	✓	✓	6	✓	✓	6	✓	✓	6	✓	✓	6	101,102,138
240/260 Wagon	'79-93	✓			10	✓		10	✓		10	✓		10	101,102,121,132,130
740/760 4DR	'90	✓	✓	✓	6	✓	✓	6	✓	✓	6	✓	✓	6	101,102
	'84-89	✓	✓	✓	6	✓	✓	6	✓	✓	6	✓	✓	6	101,109
740/760/940/960 Wagon	'84-97	✓			10	✓		10	✓		10	✓		10	101,102,121,132,130
740/960 4DR	'91-97	✓			6	✓		6	✓		6	✓		6	101,102,132,138
850 4DR	'93-97	✓			6	✓		6	✓		6	✓		6	101,102,132,138
850 Wagon	'94-97														137
C30	'08-13														137
C70 Convertible	'06-13														137
	'98-05	✓	✓	✓	6	✓	✓	6	✓	✓	6	✓	✓	6	101,110,128
S40	'05-11	✓	✓	✓	7	✓	✓	7	✓	✓	7	✓	✓	7	101,102,128
	'00-04	✓	✓	✓	7	✓	✓	7	✓	✓	7	✓	✓	7	101,108,128
S60	'10-13	✓	✓	✓	7	✓	✓	7	✓	✓	7	✓	✓	7	101,102,128
	'01-09	✓	✓	✓	7	✓	✓	7	✓	✓	7	✓	✓	7	101,102,128
S70	'98-00	✓			6	✓		6	✓		6	✓		6	101,102,132,138
S80	'10-13	✓	✓	✓	7	✓	✓	7	✓	✓	7	✓	✓	7	101,102,128
	'07-09	✓	✓	✓	7	✓	✓	7	✓	✓	7	✓	✓	7	101,102,128
	'99-06	✓	✓	✓	7	✓	✓	7	✓	✓	7	✓	✓	7	101,102,128
S90	'98-00	✓			6	✓		6	✓		6	✓		6	101,102,132,138
V40	'00-04	✓	✓	✓	11	✓	✓	8	✓	✓	8	✓	✓	8	101,102,121,128
V50	'05-11	✓	✓	✓	11	✓	✓	9	✓	✓	9	✓	✓	9	101,102,121,128
V70	'98-10	✓	✓	✓	11	✓	✓	9	✓	✓	9	✓	✓	9	101,102,121,128
V70 XC	'01-10	✓	✓	✓	11	✓	✓	9	✓	✓	9	✓	✓	9	101,102,121,128
V90	'98-00	✓	✓	✓	11	✓	✓	9	✓	✓	9	✓	✓	9	101,102,121,128
XC60	'09-13	✓	✓	✓	9	✓	✓	9	✓	✓	9	✓	✓	9	101,102,121,128
XC70	'01-13	✓	✓	✓	11	✓	✓	9	✓	✓	9	✓	✓	9	101,102,121,128
XC90	'03-13	✓	✓	✓	9	✓	✓	9	✓	✓	9	✓	✓	9	101,102,121,128

THULE 2012 REAR MOUNTED FIT GUIDE

101 Place top clips in the gap at the front edge of the top of the trunk, hatch or door.

102 Place lower clips in the bottom edge of trunk or hatch.

103 Set lower clips/hooks into vehicle's left and right tow loops under the rear of the vehicle.

104 Set lower clips/hooks into tow loop on the right and frame hole on the left.

105 Set lower clips into bottom edge of internal metal bumper.

106 Set lower clips/hooks into frame holes.

107 Set lower clips into bottom edge of rear doors.

108 Set lower clips into frame holes in back of bumper.

109 Set lower clips onto bottom edge of bumper.

110 Set lower clip/hook onto edge of structural bumper located behind plastic bumper.

111 Frame holes are located up high on the backside of bumper.

112 Set lower clip/hooks into frame holes in chassis behind bumper.

114 Chafe guards required.

115 To minimize contact between carrier tow hooks and the bumper, slide the strap through only one end of the chafe guard leaving the other end free to rest between the tow hook and the bumper.

116 Bumper cover may deform with the use of this carrier. Remove carrier when not in use.

117 The upper arm of carrier, between rubber pads, may contact the center ridge in the trunk lid when carrier is fully mounted.

118 Lower arm of the carrier will mount against the license plate and the lights to the left and right of it.

119 Lower arm of the carrier will mount on the ridge on the bottom of the rear door, just above the bottom edge of the rear door.

121 Caution: Rear wiper can not be used when carrier is mounted.

122 Offset carrier to the right.

123 Lower arm of the carrier will mount higher on the rear door, so that the upper arm rests against the metal above the rear window.

124 Rear wiper must be positioned through the upper arm of carrier.

125 Always check to make sure there is no contact between the lower straps and the muffler and/or exhaust pipe.

126 Caution: The trunk lid may deform slightly with the use of this carrier. Remove carrier when not in use.

127 Route top strap under the spoiler on top of the hatch.

128 Lower arm of carrier should be positioned on upper tier of bumper.

129 Rubber weather stripping at top door/hatch will deform over time. Remove carrier when not in use.

130 Set lower clips/hooks into frame holes in bumper located by the right and left bumper strut.

131 Set lower clips/hooks into tow loop on the right and edge of bumper, by the bumper strut, on the left.

132 Thule cannot recommend the use of 3-bike carriers on this vehicle.

133 Carrier is not recommended because lower straps can not be mounted in a safe place.

134 Carrier is not recommended because top straps should not be mounted directly to glass or plastic trim covering glass.

135 Carrier is not recommended because vehicle is unable to support carrier weight.

136 Carrier is not recommended because upper arm of carrier could damage trunk lid.

137 Carrier is not recommended because top straps can not be mounted in a safe place.

138 Lower arm of carrier will rest in the bottom of the license plate well.

139 Lower arm of carrier will rest above license plate well.

140 Lower arm of carrier will rest at bottom of trunk lip.

141 Lower arm of carrier will rest in the area between the license plate well and upper tier of the bumper.

142 Set lower clips/hooks on top edge of the metal bumper struts.

143 When installing a Freeway or Speedway rack the use of a versa clip is required.

144 Vehicle can have an externally mounted spare tire prohibiting the use of any strap rack.

145 Set lower clips/hooks into tow loop on the left and frame hole on the right.

146 Carrier is not recommended because it cannot be installed without unwanted contact.

147 Set lower clips/hooks in tow loop located in the center of the vehicle behind the bumper.

148 Please verify vehicle cargo area will accept bicycle wheelbase prior to purchase.

149 Due to a factory incorporated "tire hanger" on some models, the 963 "Spare Me" cannot be used on this vehicle. Please check your vehicle's configuration before buying this product.

150 Only the "963XT, 963XTR, and 963PRO" can be used with this vehicle, due to mounting limitations on the original "963 Spare Me". If you have the "963 Spare Me" and would like to fit one of these vehicles - you need part # 753-3532.

151 If this vehicle has a spoiler installed, it is a "NO FIT"

152 If this vehicle has a spare tire mounted back-up camera, the 963XT will not fit.

153 Truck bed is not long enough to carry bikes using the 501 Insta-Gater.

154 All instances of this vehicle come with a factory spoiler which is not strong enough to take the weight of our strap carriers.

155 Place side clips in the bottom edge of trunk or hatch next to the lower clips

156 Do not operate convertible roof while rack is in place.