PARTS LIST:

1	Bull Bar
1	Driver/Left Frame Mounting Bracket
1	Passenger/Right Frame Mounting Bracket
4	12-1.75mm x 30mm Hex Head Bolts
8	12mm ID x 24mm OD x 2.5mm Flat Washers
4	12mm Lock Washers
4	12mm Hex Nuts

Passenger Side Mounting Bracket

Driver Side Mounting Bracket

Complete Installation

PROCEDURE:

1. **REMOVE CONTENTS FROM BOX. VERIFY ALL PARTS ARE PRESENT. READ INSTRUCTIONS CAREFULLY BEFORE STARTING INSTALLATION. CUTTING REQUIRED**
2. From under the front of the vehicle, remove the driver side and passenger side plastic splash guards and place them on a clean, stable work area, **(Figure 1)**. To make reinstallation easier, note type and location of all factory fasteners. The plastic center splash guard may also be removed for better access to hardware if necessary. **IMPORTANT:** Apply masking tape to the openings in the bumper to protect the painted finish during bracket installation.
3. Starting on the driver side, remove the (3) factory bumper mount bolts located toward the outside of the bumper mount. Select the driver side frame mounting bracket and insert it into the opening in the back of the bumper cover **(Figure 2)**. Line up the (3) slots in the Mounting Bracket with the (3) bolt locations for the factory bumper bracket, **(Figure 2)**. Secure the Frame Mounting Bracket to the factory bumper bracket using the (3) factory bolts removed earlier. Snug but do not tighten hardware at this time. Repeat this Step for passenger side Frame Mounting Bracket installation.
4. With assistance, line up the mounting tabs on the Bull Bar with the (2) previously installed Frame Mounting Brackets. Bolt the Bull Bar to the Frame Mounting Brackets with the included (4) 12mm x 30mm Hex Bolts, (8) 12mm Flat Washers, (4) 12mm Lock Washers and (4) 12mm Hex Nuts, **(Figure 3 & 4)**. Snug but do not tighten hardware at this time.
5. Level and adjust Bull Bar properly and tighten all hardware. Reinstall the center splash guard if it was previously removed.
6. Select the driver side plastic splash guard and hold it up in position against the Frame Mounting Bracket, **(Figure 5)**. Mark the area that needs to be removed from the splash guard to clear the Mounting Bracket. Check the location carefully and cut only the minimum amount of plastic from the splash guard to clear the Bracket, **(Figure 6)**. Once the slot has been checked for clearance, reinstall the splash guard with the factory hardware. Repeat this step to reinstall the passenger side splash guard.
7. Do periodic inspections to the installation to make sure that all hardware is secure and tight.

To protect your investment, wax this product after installing. Regular waxing is recommended to add a protective layer over the finish. Do not use any type of polish or wax that may contain abrasives that could damage the finish.
For stainless steel: Aluminum polish may be used to polish small scratches and scuffs on the finish. Mild soap may be used also to clean the Bull Bar.
For gloss black finishes: Mild soap may be used to clean the Bull Bar.

Drive Side Installation Pictured

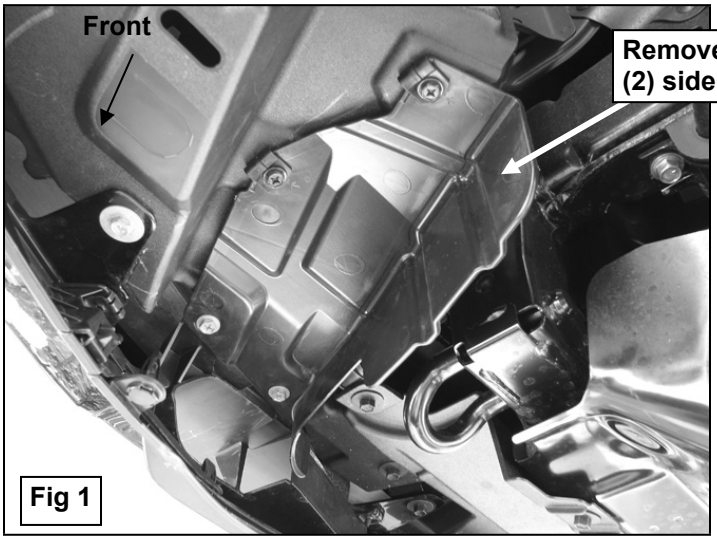

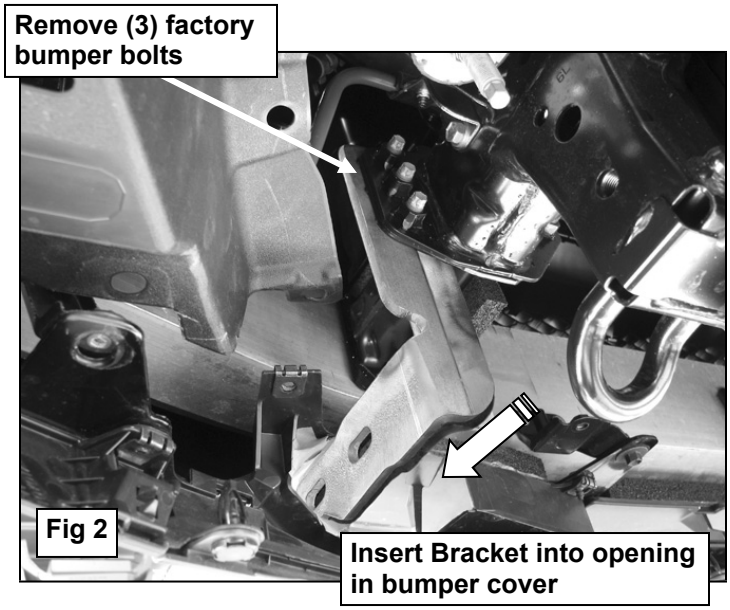

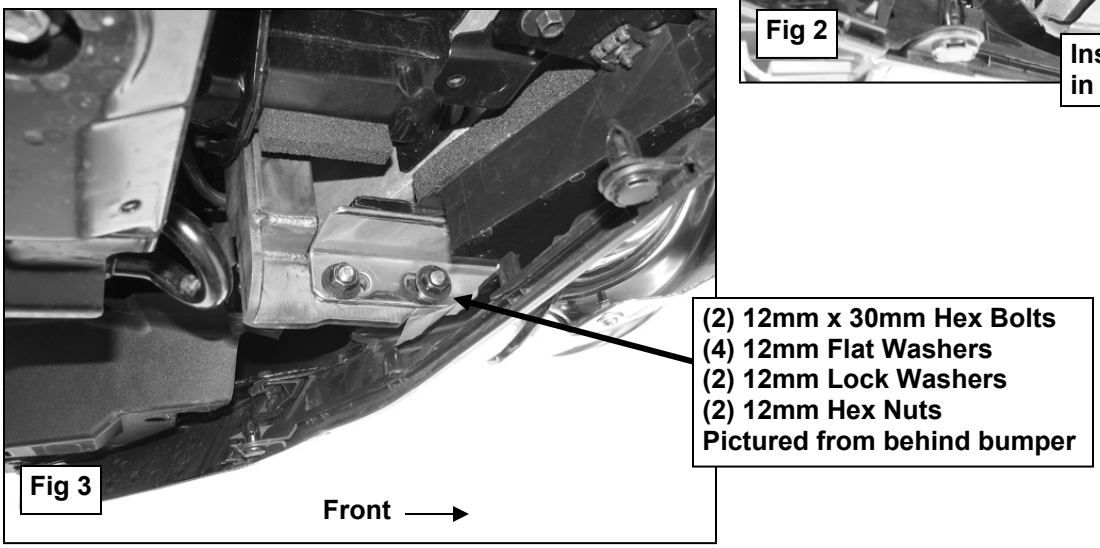

Driver Side Installation Shown

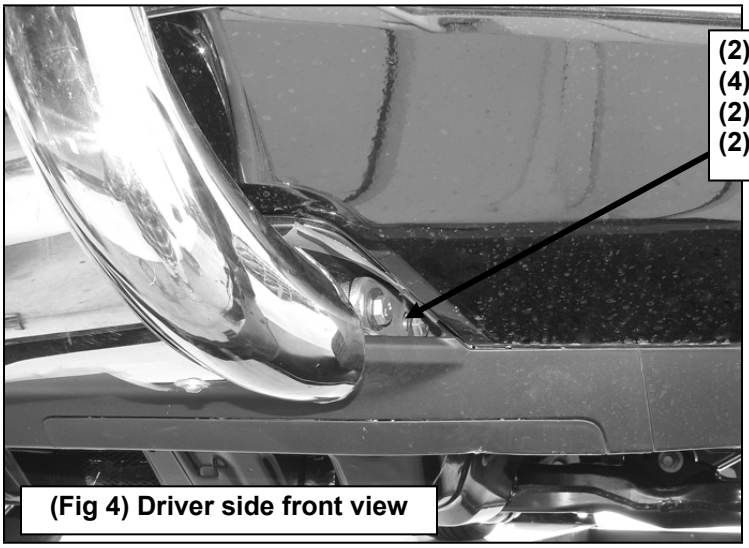

(Fig 4) Driver side front view

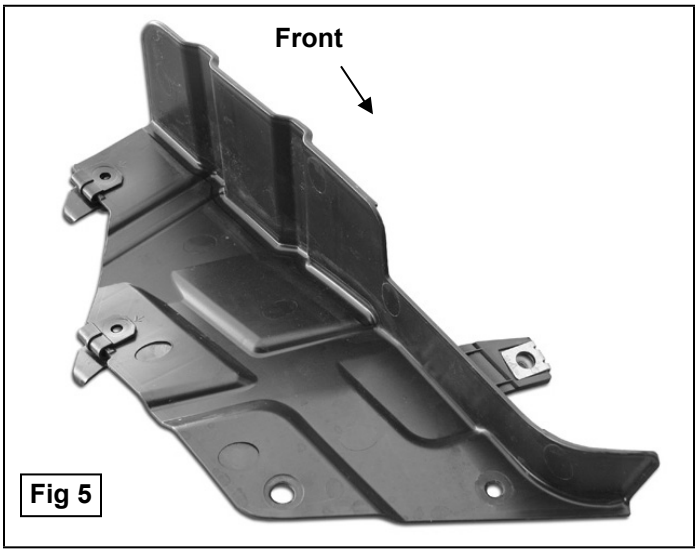

Fig 5

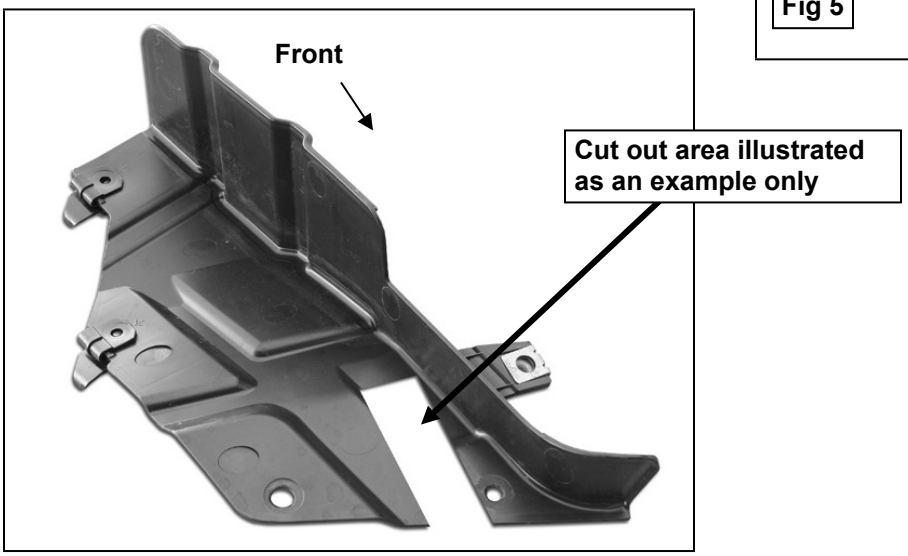

(Fig 6) Driver side splash guard pictured

Learn more about grille guards and bull bars we have.