YAKIMA

SweetRoll

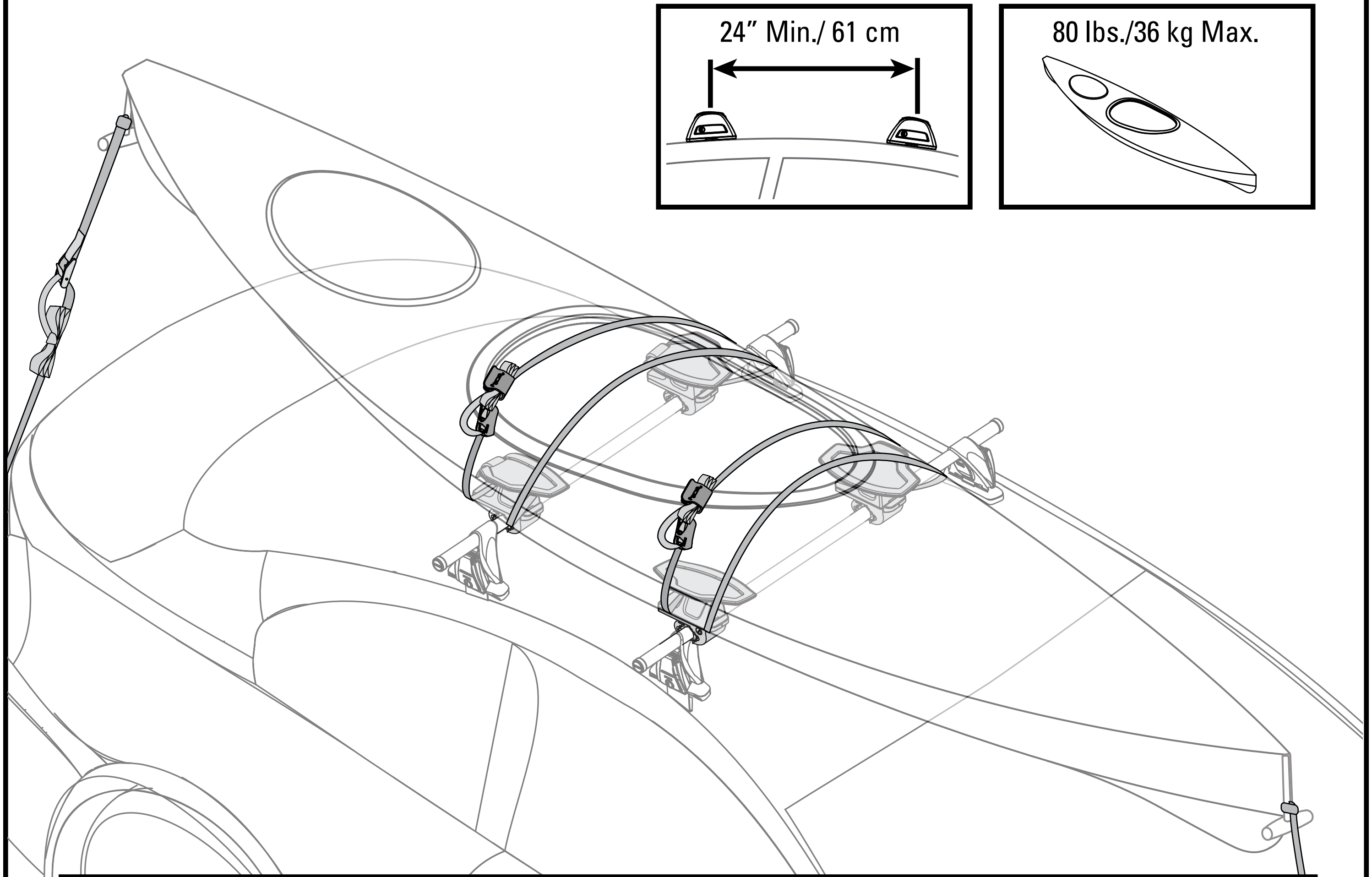
24" Min./ 61 cm
80 lbs./36 kg Max.

CONTENTS

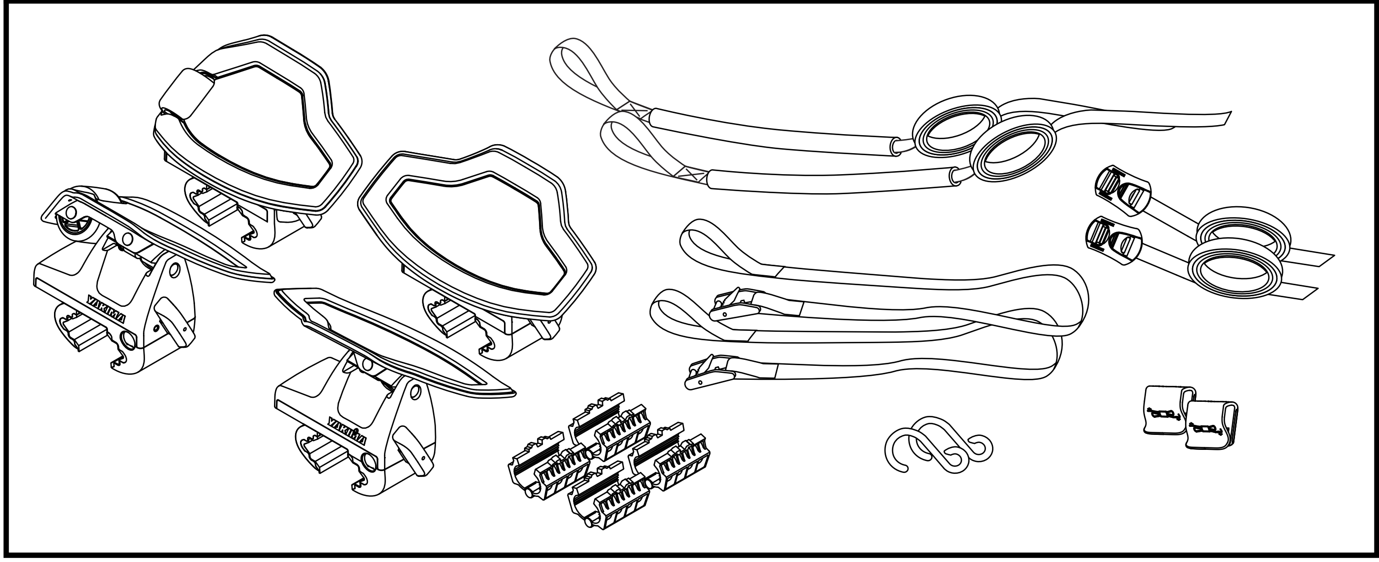

INSTALLATION

1

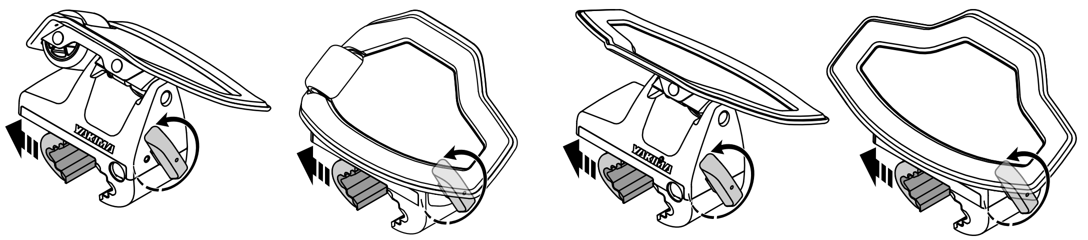
YAKIMA
YAKIMA

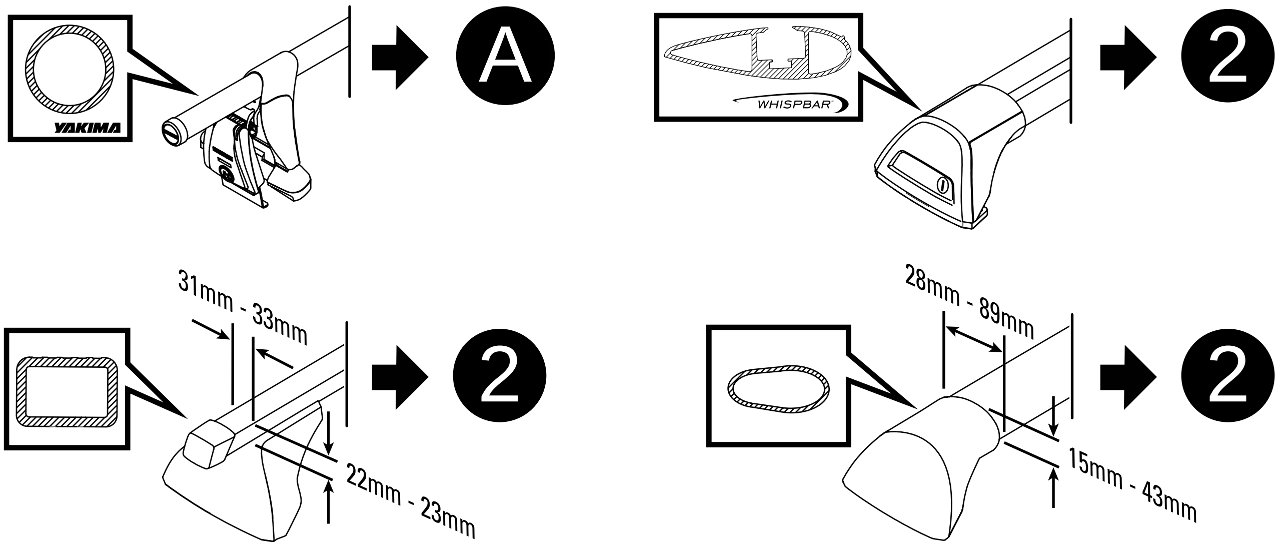
YAKIMA
A
WHISPBAR
2
31mm - 33mm
22mm - 23mm
2
28mm - 89mm
15mm - 43mm
2

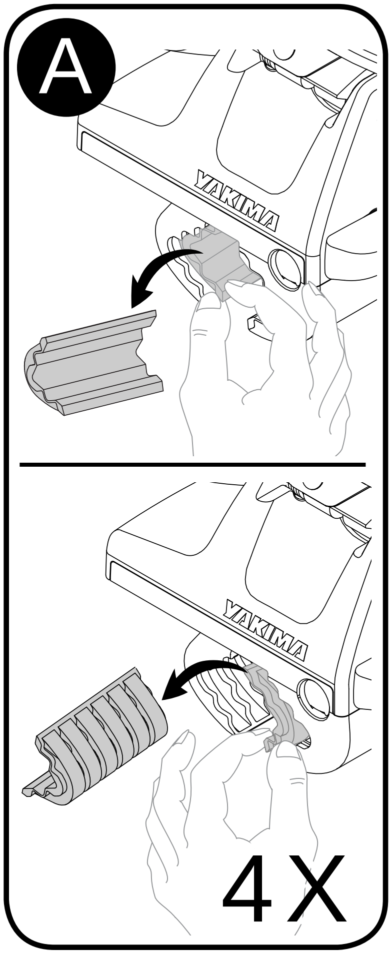
A
YAKIMA
YAKIMA
4X

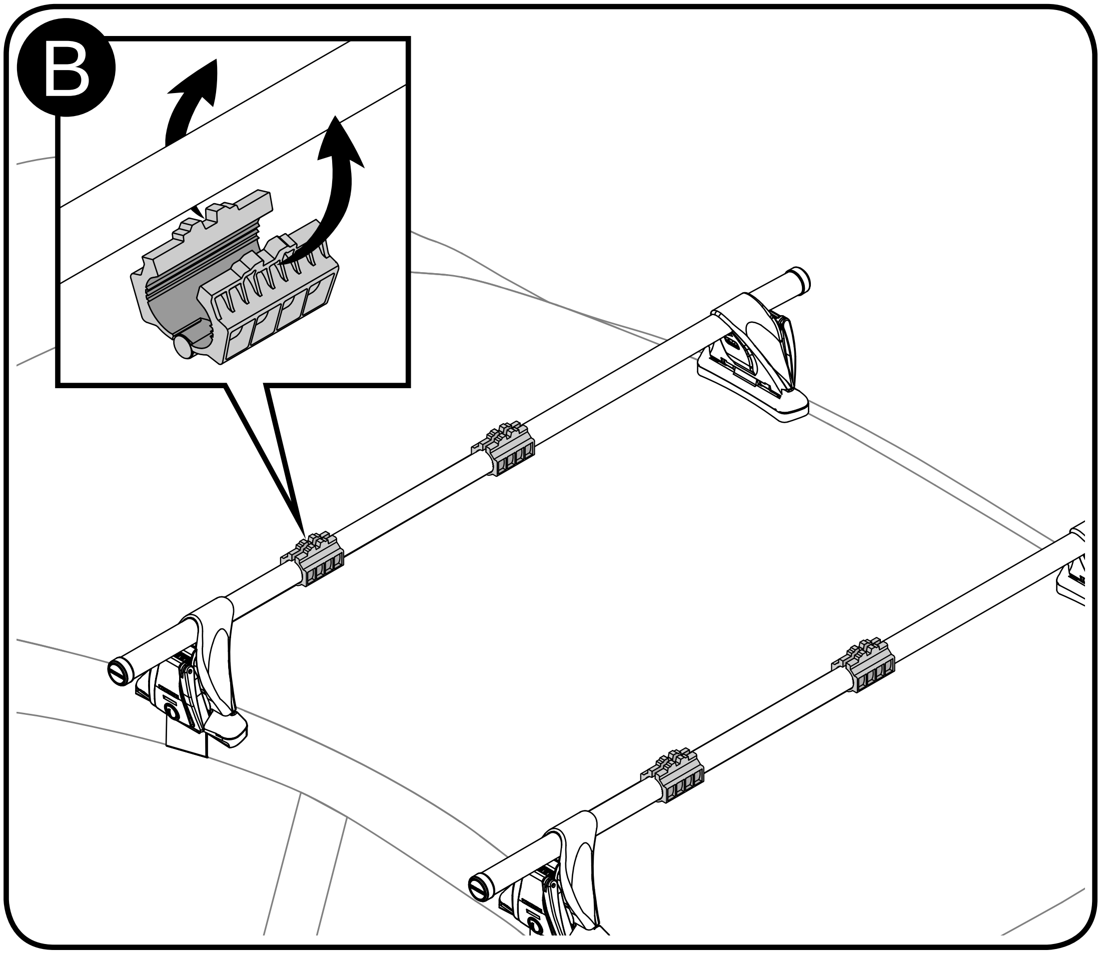

2

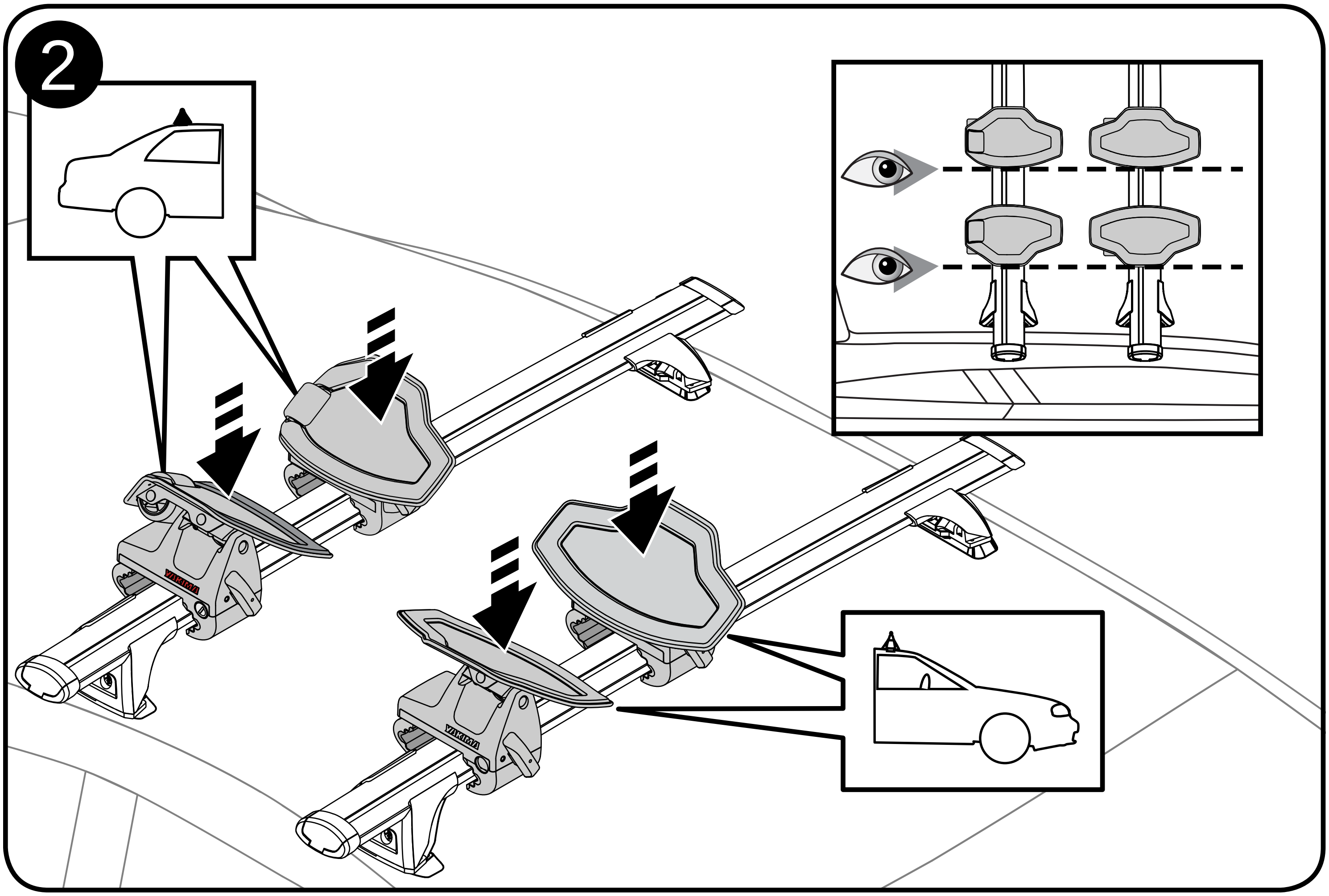
YAKIMA
YAKIMA

3

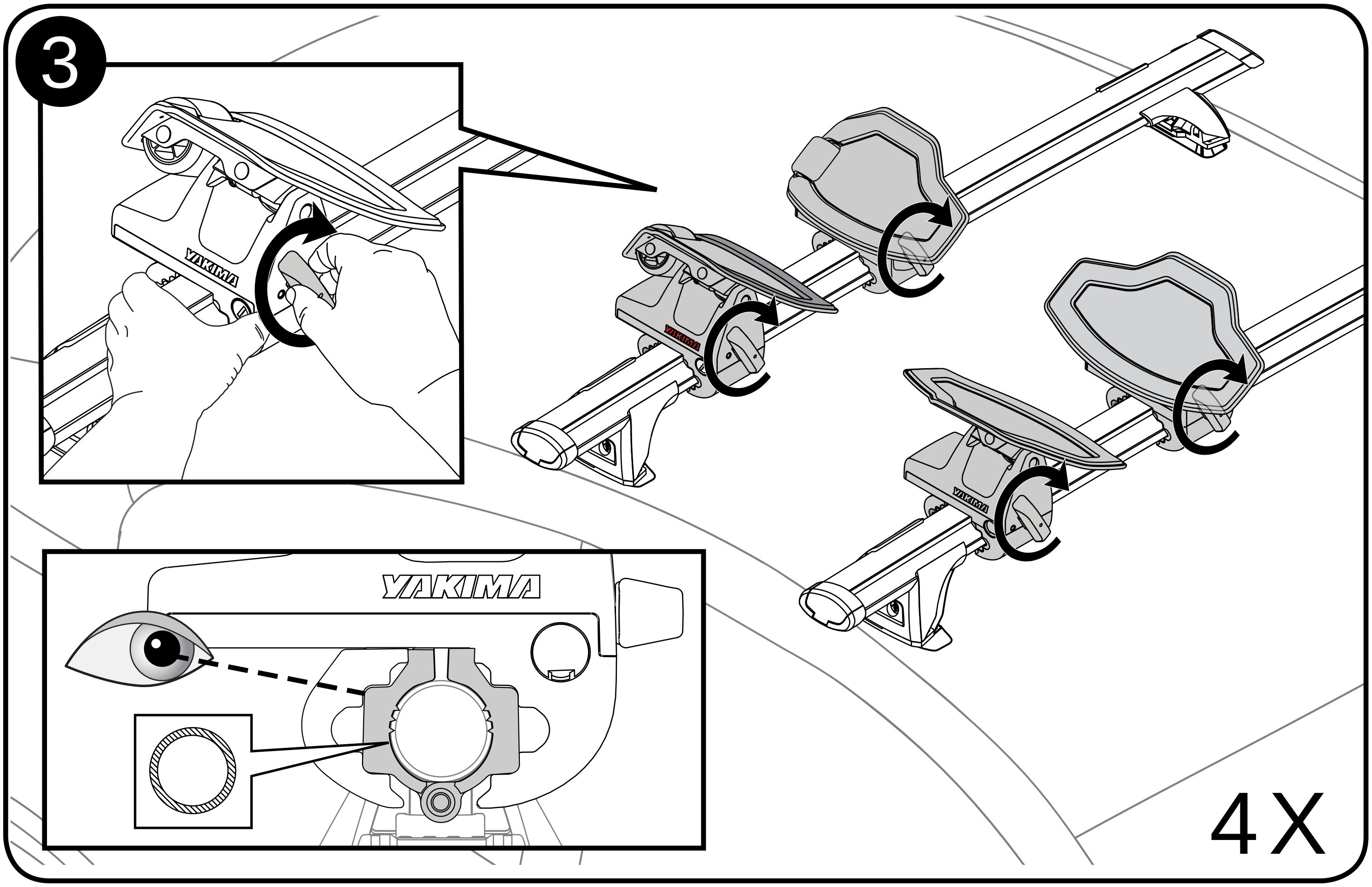
YAKIMA
YAKIMA
YAKIMA
YAKIMA
4X

4

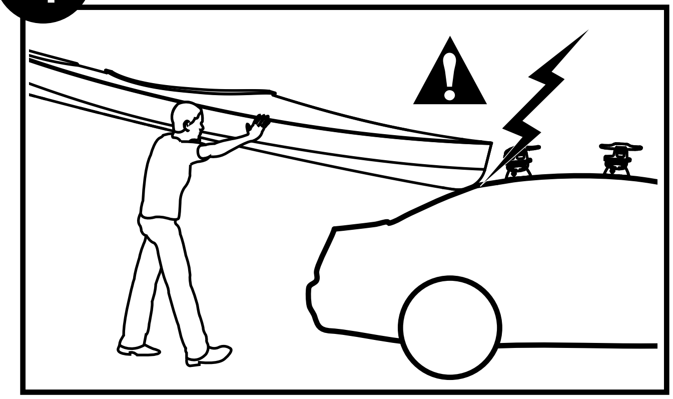

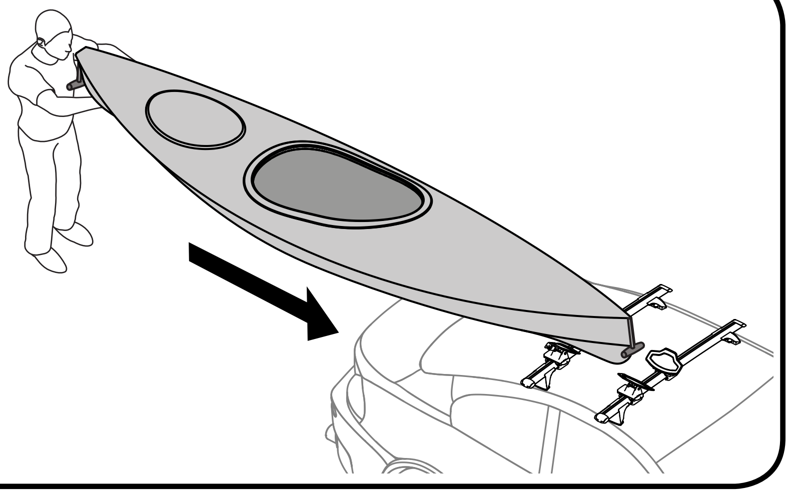

5

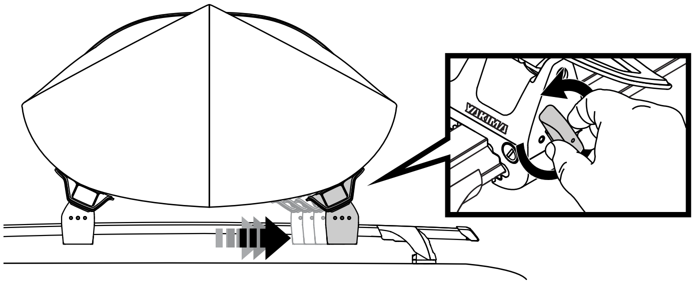

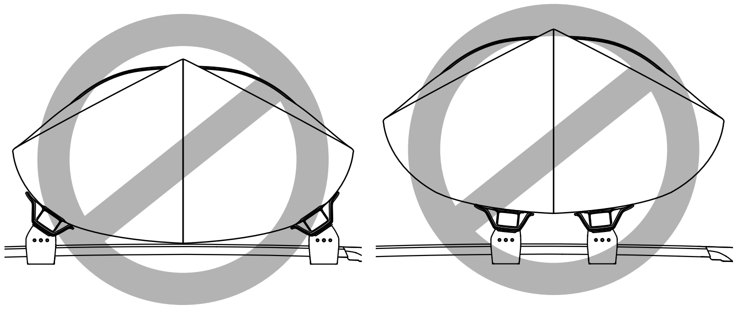

6

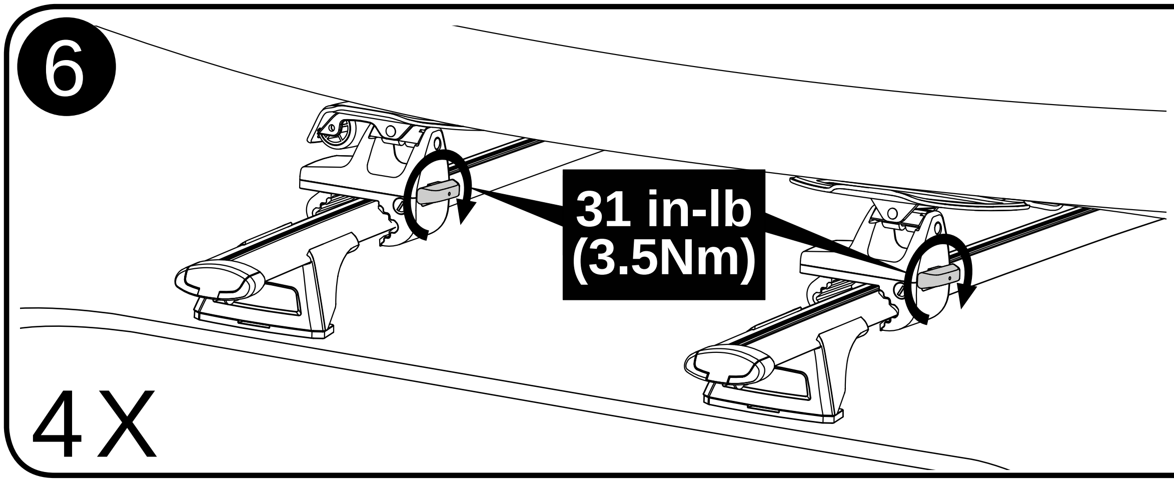

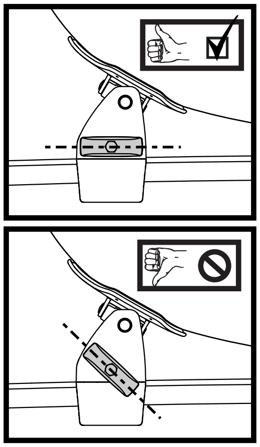

4X

OPTIONAL

If you have purchased lock cores install them according to the instructions they came with.

7

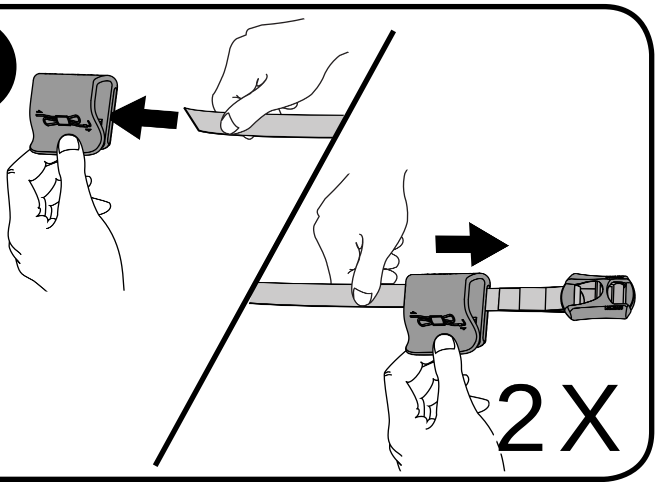

2X

8

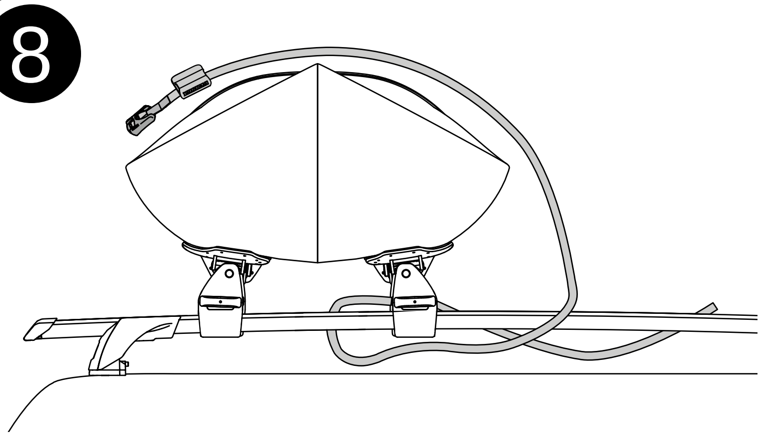

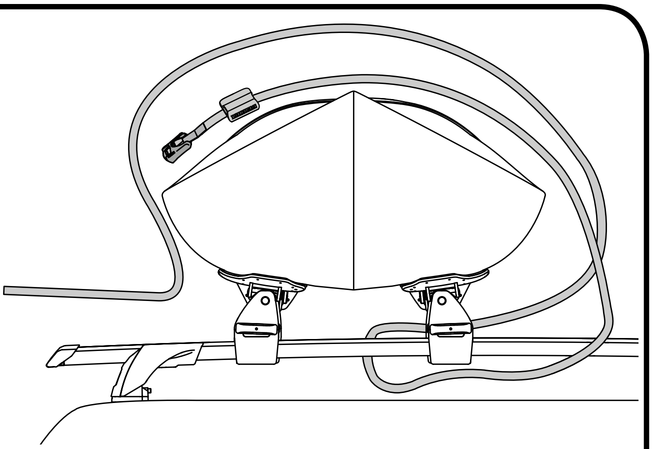

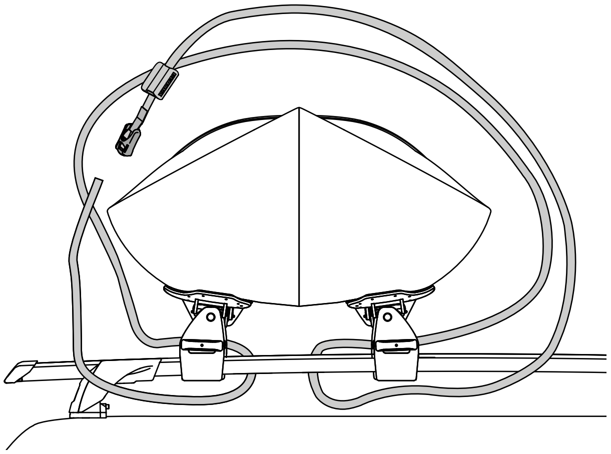

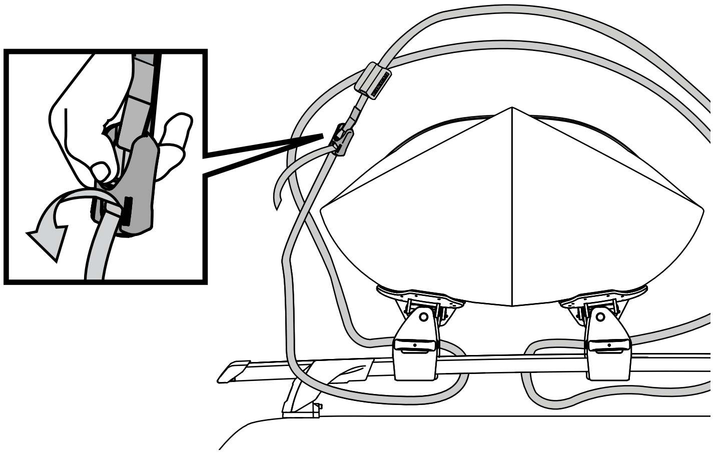

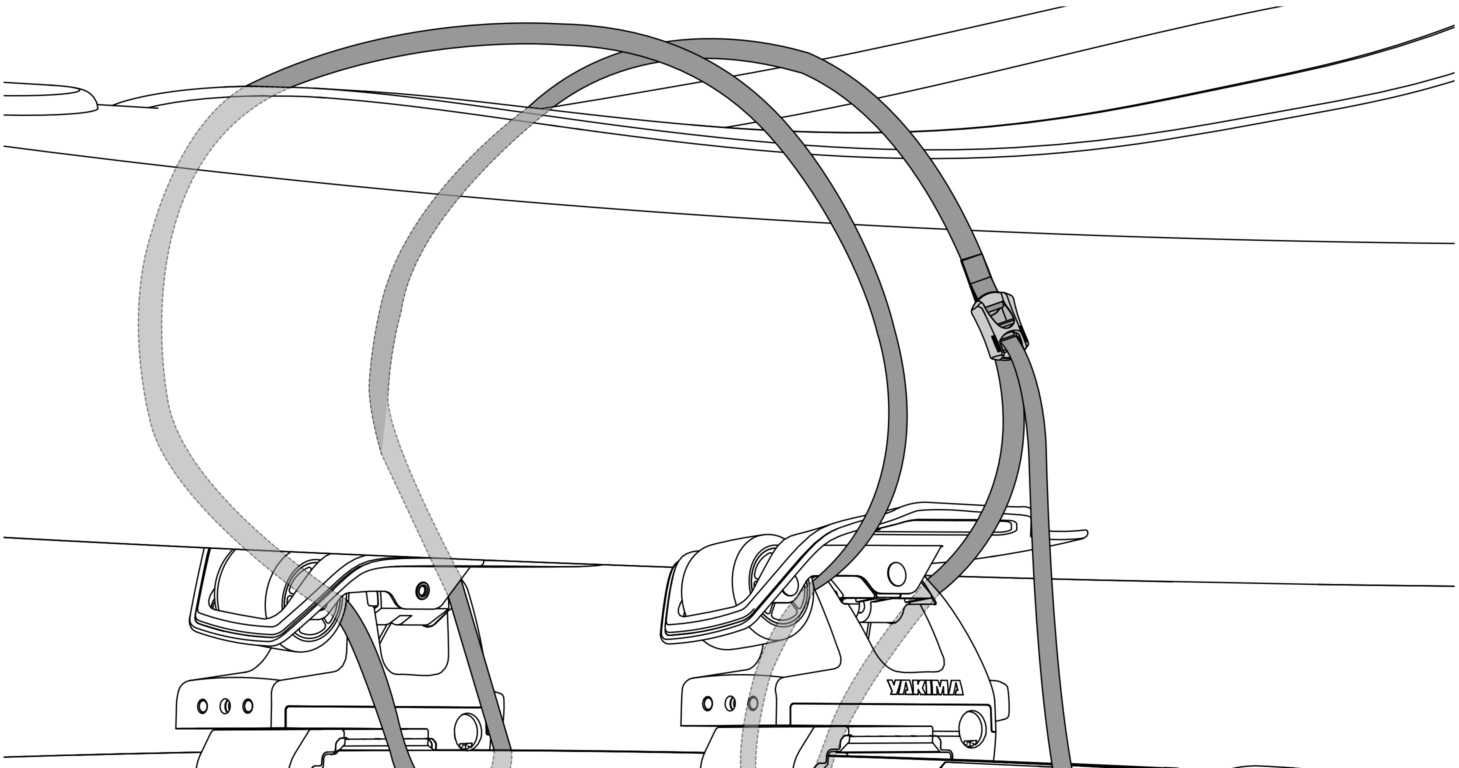

2X

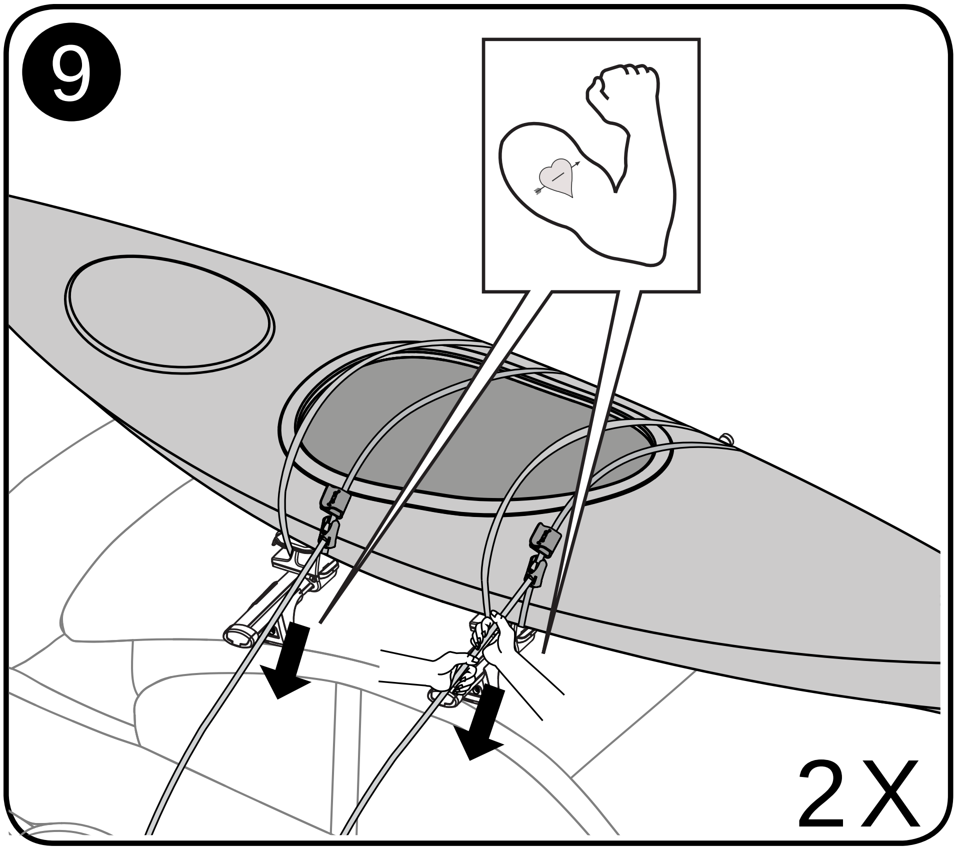
9
2X

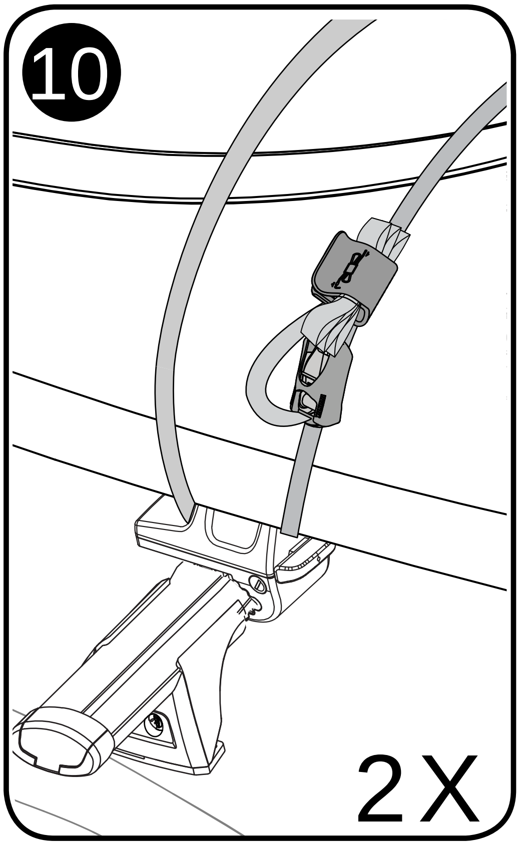
10
2X

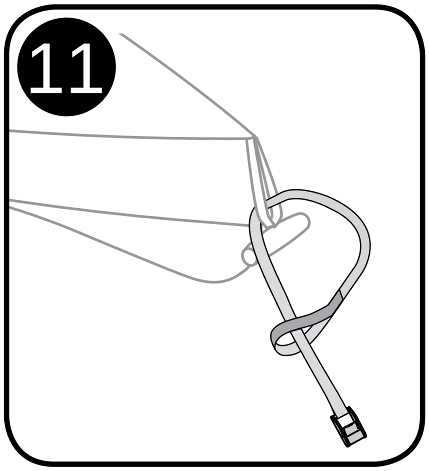
11

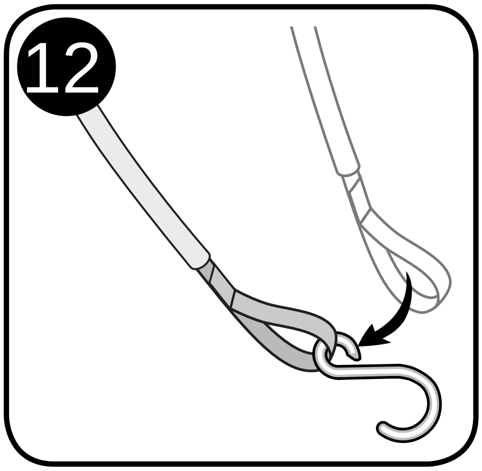
12

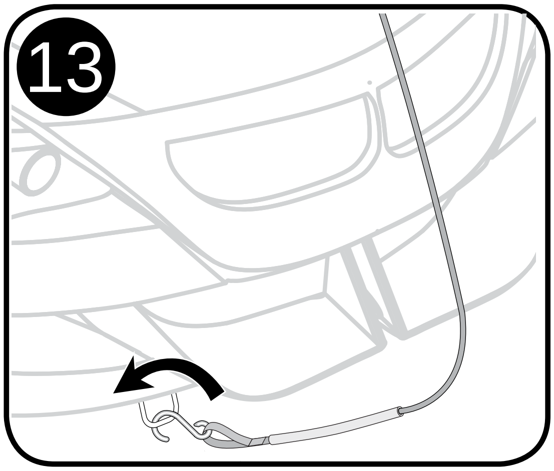
13

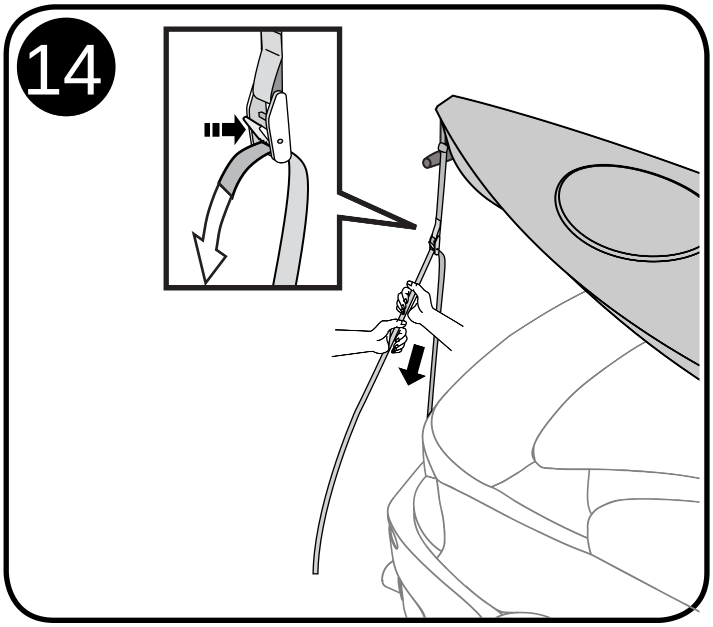
14

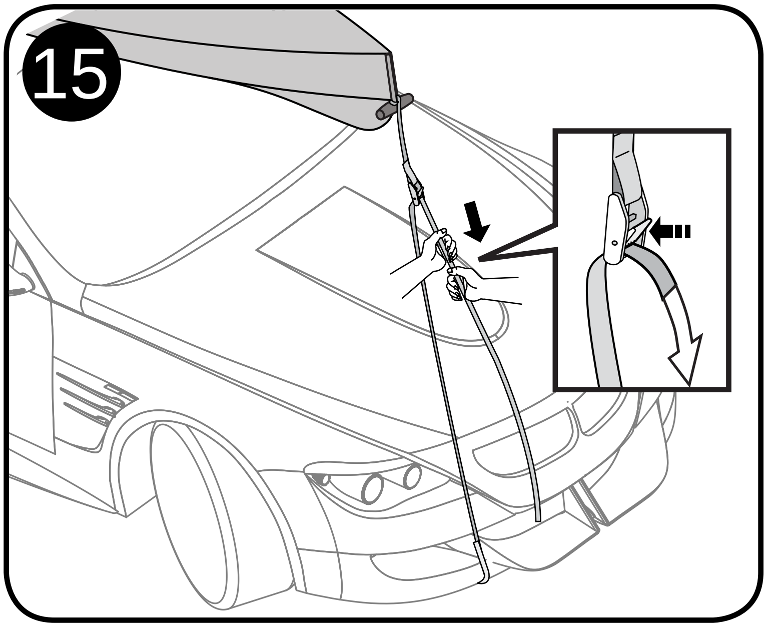
15

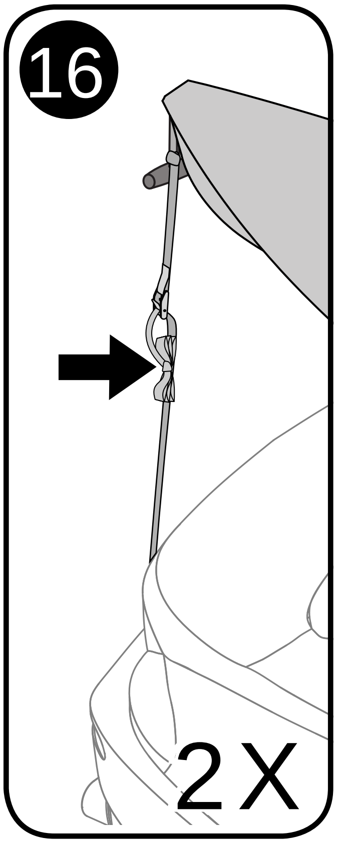
16
2 X

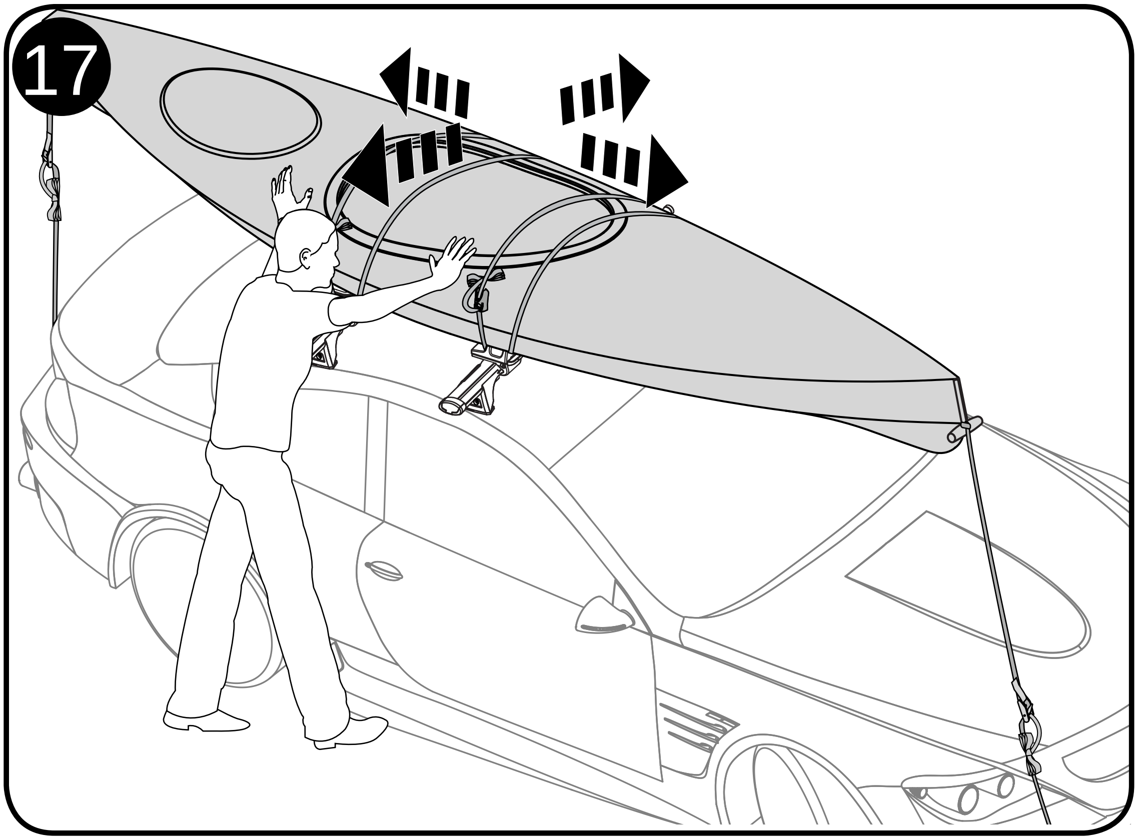
17

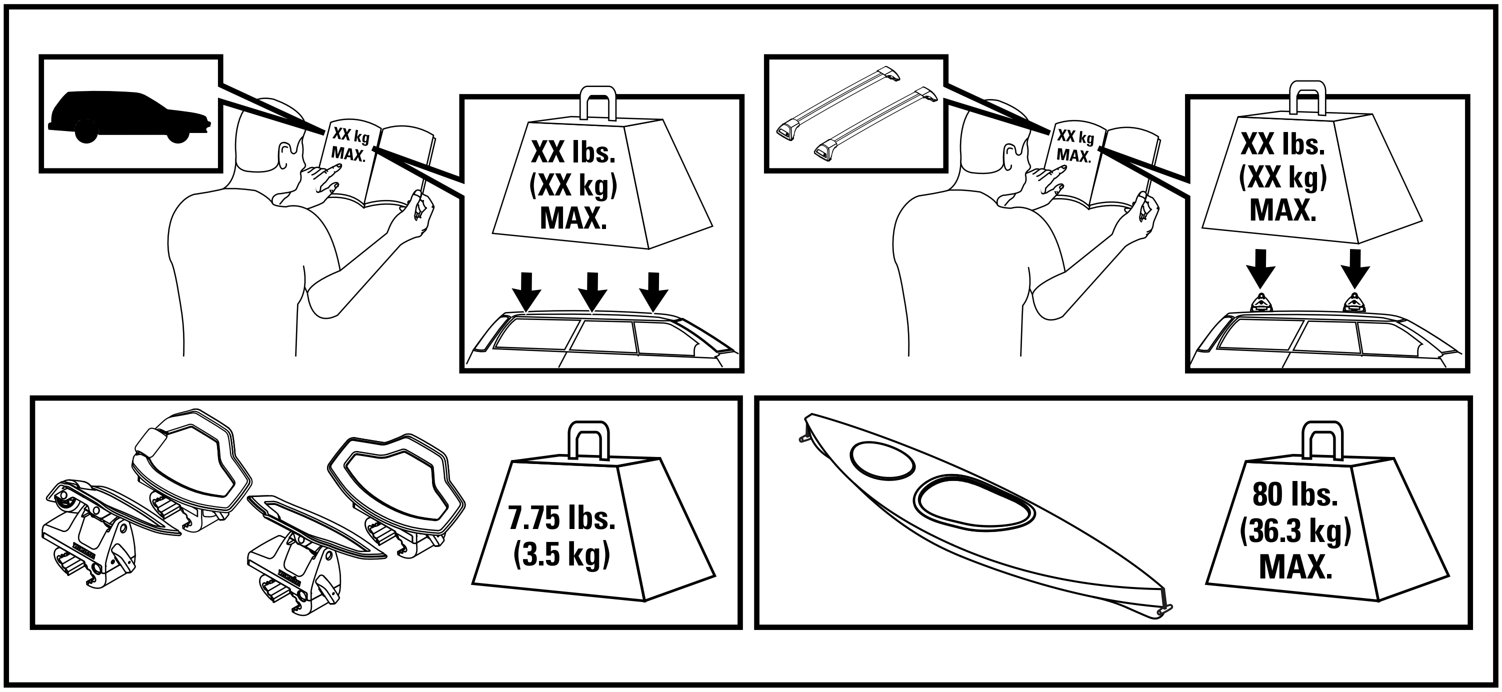
XX kg MAX.
XX lbs. (XX kg) MAX.
XX kg MAX.
XX lbs. (XX kg) MAX.
7.75 lbs. (3.5 kg)
80 lbs. (36.3 kg) MAX.

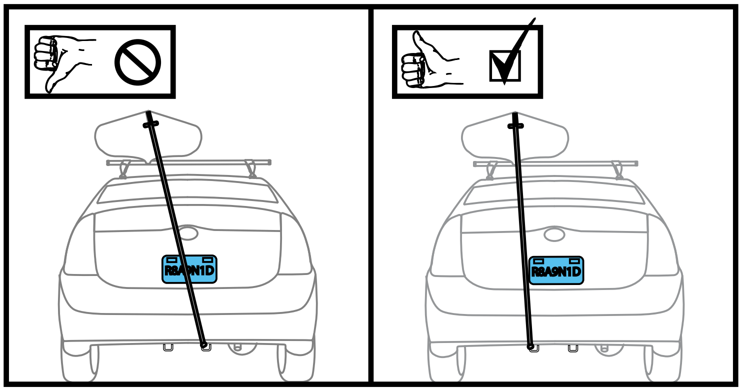
R8A9N1D
R8A9N1D

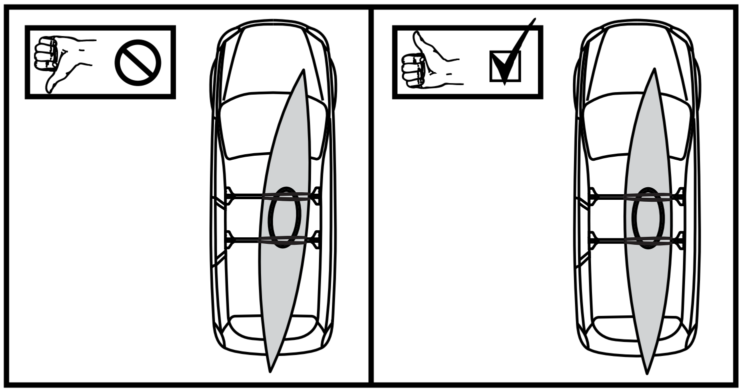

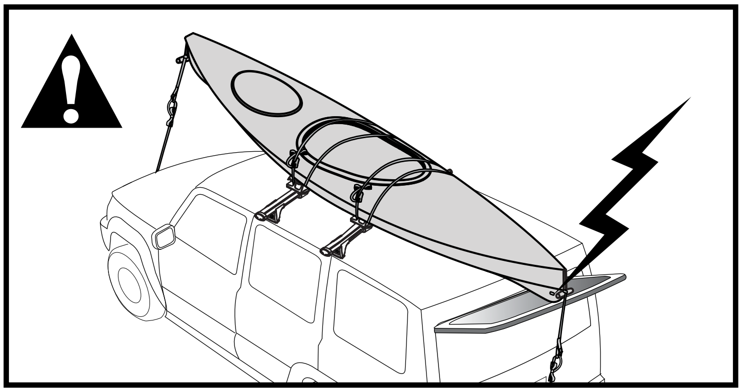

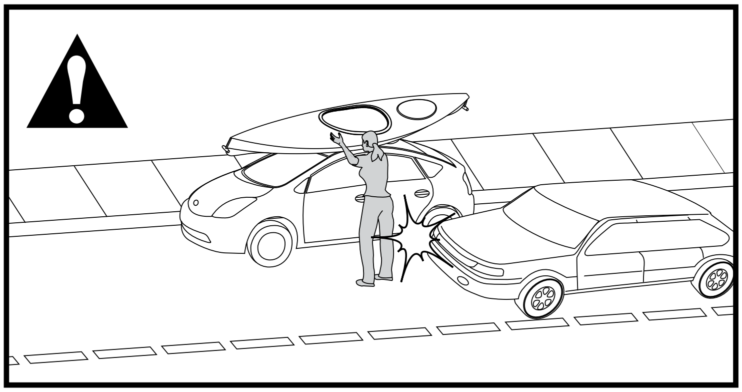

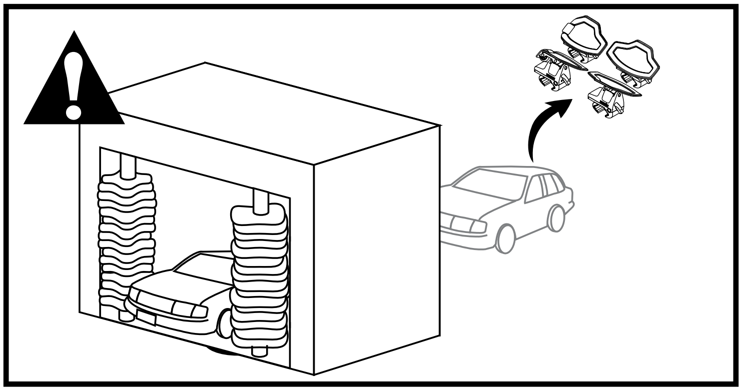

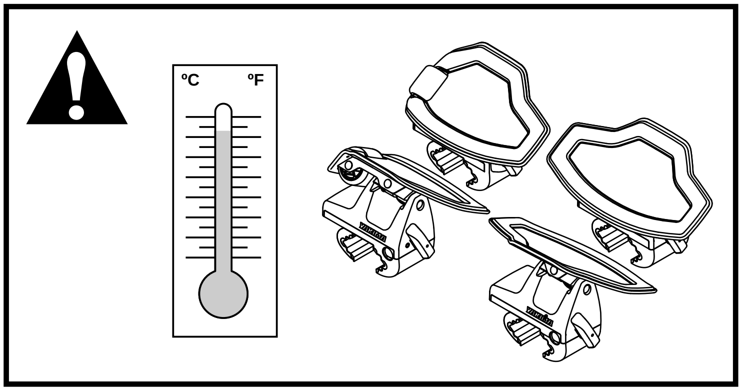

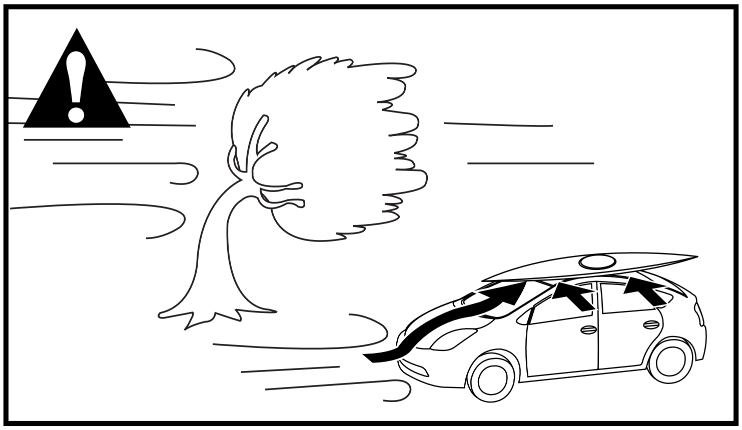

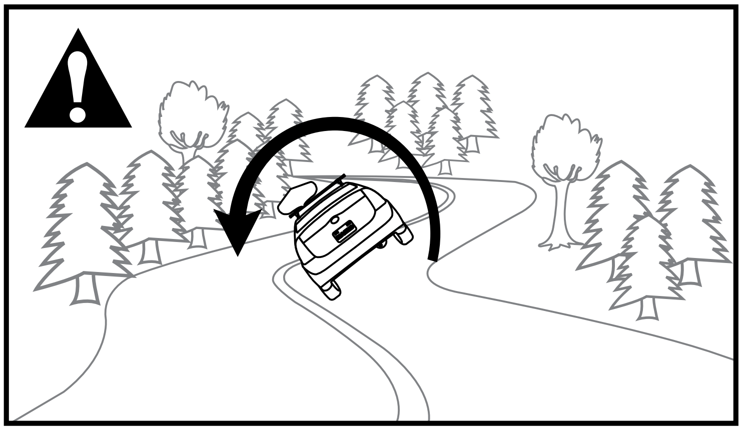

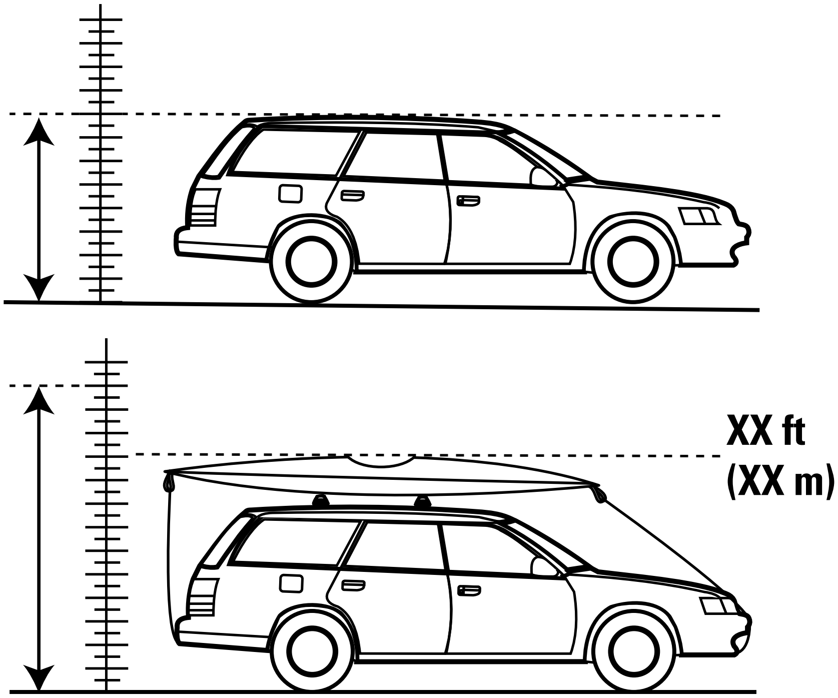

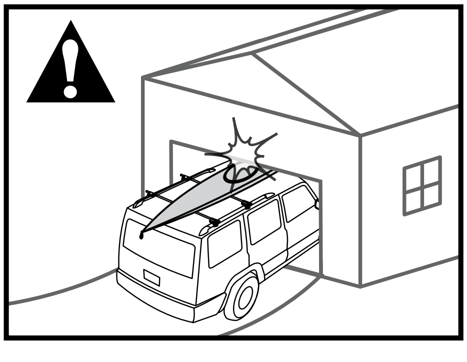

Record Height Here.